SP 1309-1(a)
DATE: OCTOBER 2006

CROSS REFERENCES	
Sheet No.	Description
33	Estimated Quantites
79	Driveway Details & Quantities

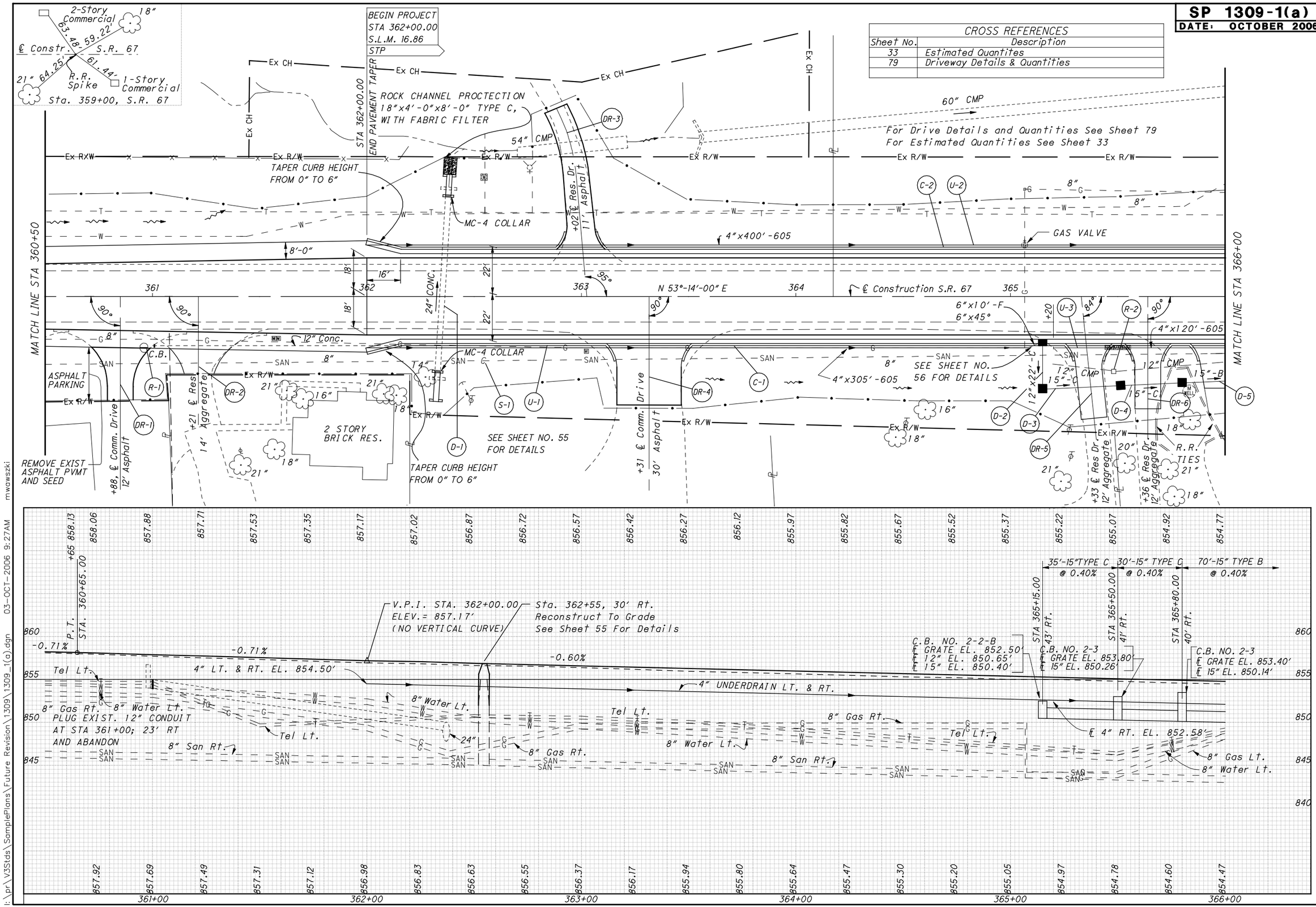

HORIZONTAL SCALE IN FEET 0 10 20 40

CALCULATED MJG
CHECKED DSN

PLAN AND PROFILE-S.R. 67
STA. 360+50 to STA. 366+00

CLI-67-16.86

I:\pr\V3Stds\SamplePlans\Future Revision\1309\1309_1(a).dgn 03-OCT-2006 9:27AM mwawszki

SP 1309-1(b)
DATE:OCTOBER 2006

CALCULATED MJG
CHECKED DSN

REF NO.	SHEET NO.	STATION FROM	STATION TO	SIDE	202 CATCH BASIN REMOVED	202 PIPE REMOVED 24" AND UNDER	601 ROCK CHANNEL PROTECTION TYPE C WITH FABRIC FILTER	602 CONCRETE MASONRY	603 24" CONDUIT, TYPE A, 706.02	603 15" CONDUIT, TYPE B	603 18" CONDUIT, TYPE B	603 12" CONDUIT, TYPE C	603 15" CONDUIT, TYPE C	603 6" CONDUIT, TYPE F	603 6" CONDUIT, TYPE F	604 MANHOLE ADJUSTED TO GRADE (SANITARY)	604 MANHOLE RECONSTRUCTED TO GRADE (SANITARY)	604 CATCH BASIN, NO. 2-2B	604 CATCH BASIN, NO. 2-3	604 CATCH BASIN, NO. 3A	605 4" SHALLOW PIPE UNDERDRAIN	609 COMBINATION CURB AND GUTTER TYPE 2	BENDS AND BRANCHES FOR INFO. ONLY 6"x45°
					EACH	FT	CU YD	CU YD	FT	FT	FT	FT	FT	FT	FT	EACH	EACH	EACH	EACH	EACH	FT	FT	NO.
C-1	31-32,34	362+00	373+00	R†																		1100	
C-2	31-32	362+00	366+93	L†																		532	
C-3	32,34	367+37	371+67	L†																		458	
R-1	31	360+97		R†	1																		
R-2	31 & 32	365+16	366+30	R†	1	114																	
R-3	32	366+89	367+33	R†		44																	
R-4	32	367+28	367+35	R†		28																	
R-5	32	367+56	368+03	R†		47																	
R-6	32	368+65	369+13	R†		48																	
R-7	32	369+46	370+50	R†		104																	
R-8	32 & 34	370+83	372+00	R†	1	117																	
D-1	31 & 55	362+35		L† & R†			2	0.9	24														
D-2	31	365+15		R†								22								1			
D-3	31	365+15	365+50	R†									35					1					
D-4	31	365+50	365+80	R†									30						1				
D-5	31 & 32	365+80	366+50	R†						70									1				
D-6	32	366+42	366+62	L†								80								1			
D-7	32	366+50		R†								15								1			
D-8	32	366+50	367+47	R†							97								1				
D-9	32	367+27	367+47	R†										25									1
D-10	32	367+47	368+50	R†							103								1				
D-11	32	368+50		R†								15								1			
D-12	32	368+50	369+32	R†							82								1				
D-13	32	369+32	369+98	R†							66								1				
D-14	32	369+98		R†								15								1			
D-15	32	369+98	370+70	R†							72								1				
D-16	32	370+70	371+45	R†							75								1				
S-1	31 & 55	362+55		R†													1						
S-2	32 & 57	366+36		R†													1						
S-3	32 & 57	369+40		R†												1							
U-1	31	362+00	365+15	R†											10						305		1
U-2	31 & 32	362+00	366+42	L†											10						432		1
U-3	31 & 32	365+20	366+50	R†											10						120		1
U-4	32	366+55	368+50	R†											10						185		1
U-5	32	368+55	369+98	R†											10						133		1
U-6	32	367+55	371+45	L†											10						382		1
U-7	32 & 34	370+03	372+00	R†											10						187		1
TOTALS CARRIED TO GENERAL SUMMARY					3	502	2	0.9	24	70	495	147	65	25	70	1	2	1	8	5	1744	2090	

ESTIMATED QUANTITIES- STA. 360+50 TO STA 371+50

CLI-67-16.86

I:\pr\V3Stds\SamplePlans\Future Revision\1309\1309_1(b).dgn 03-OCT-2006 9:27AM mwawszki

CROSS REFERENCES	
Sheet No.	Description
3-4	℄ References & Benchmarks
37	Profile
38	Estimated Quantities
79	Drive Details and Quantities
86	Culvert Detail and Quantites
92	Intersection Detail

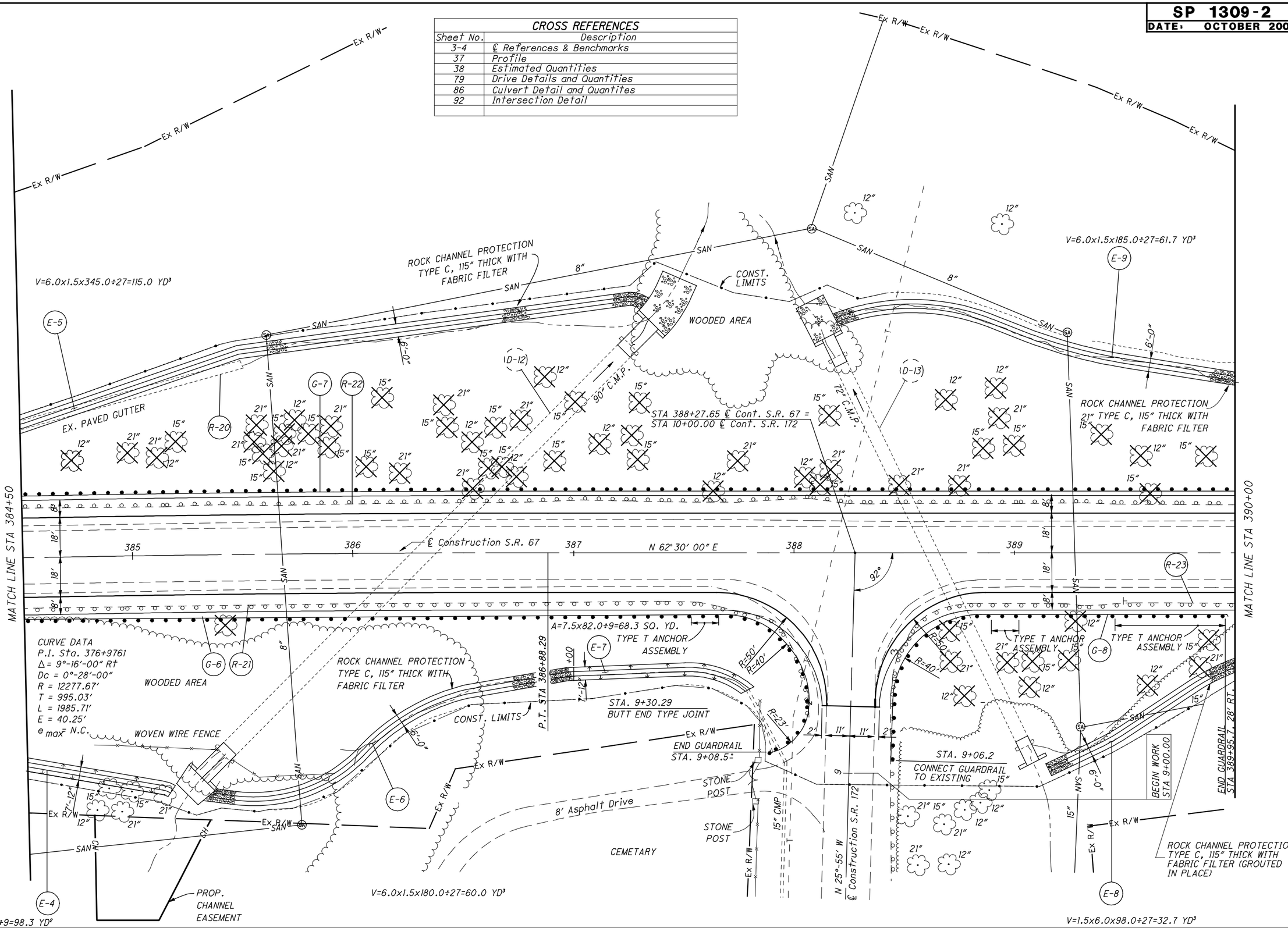

HORIZONTAL SCALE IN FEET
0 10 20 40

CALCULATED MJG
CHECKED DSN

PLAN-S.R. 67
STA. 384+50 TO STA. 390+00

CLI-67-16.86

I:\pr\V3Stds\SamplePlans\Future Revision\1309\1309_2.dgn 03-OCT-2006 9:27AM mwawszki

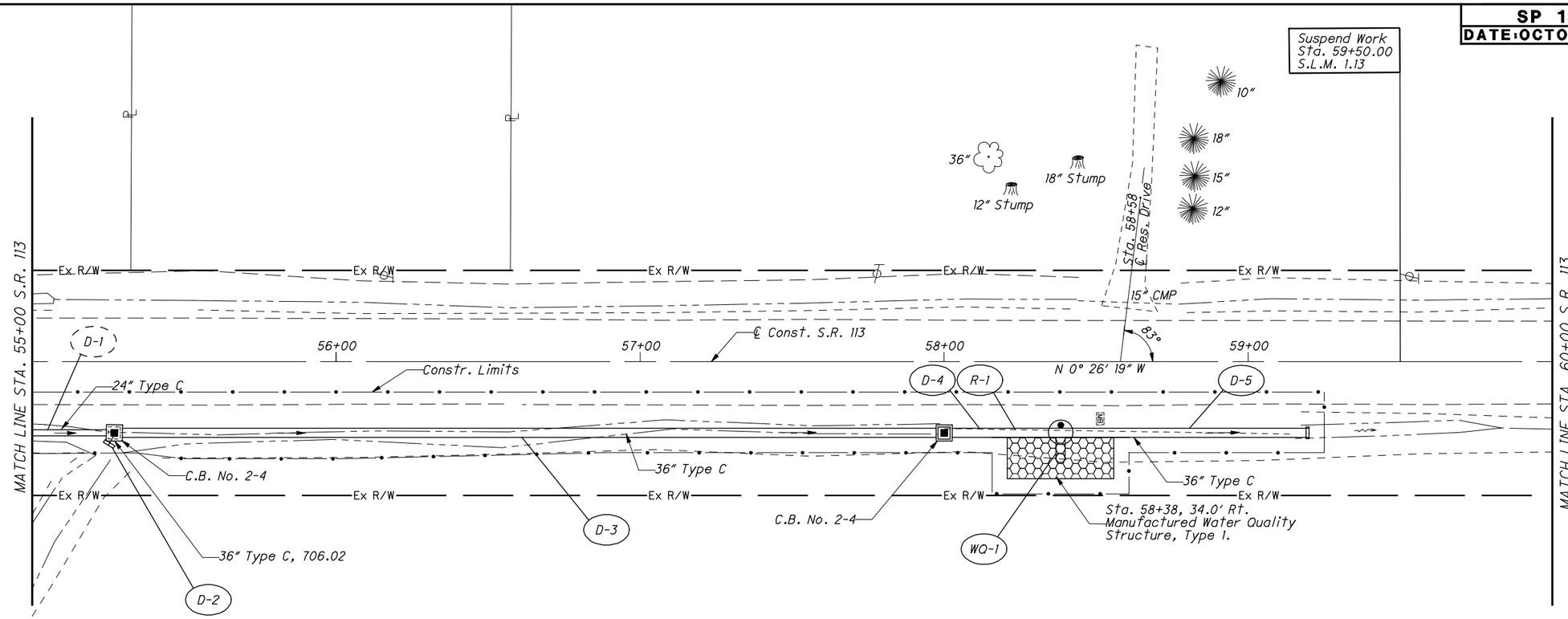

For Quantities, See Sheet 20.

AREA FOR MANUFACTURED SYSTEM

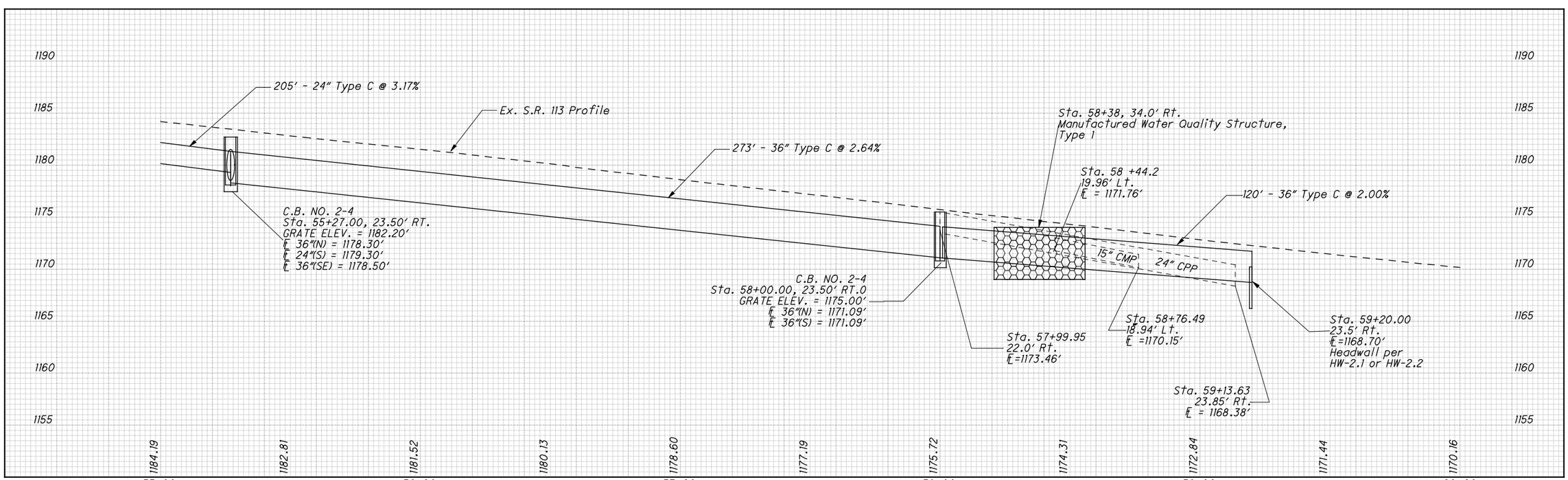

N

HORIZONTAL SCALE IN FEET 0 10 20 40

CALCULATED DRT
CHECKED TGH

PLAN AND PROFILE
STA. 55+00 TO STA. 60+00 S.R. 113

NOB-113-0.58

I:\pr\V3Stds\SamplePlans\Future Revision\1309\1309_3.dgn 03-OCT-2006 9:27AM mwawszki

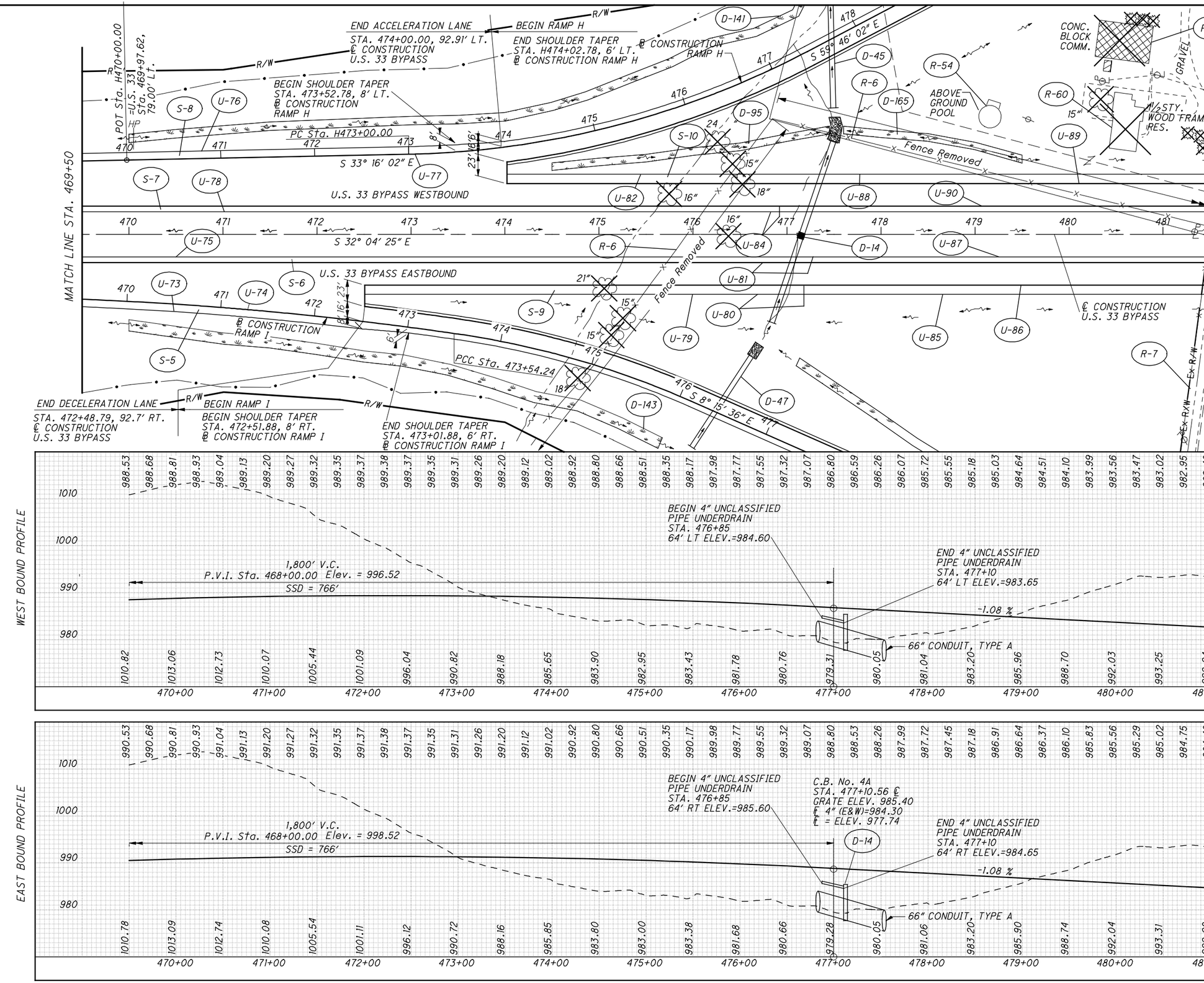

CROSS REFERENCES	
Sheet No.	Description
79	Ref. Monuments, ODOT #418 & #419
46-67	Estimated Quantities
486, 487	Terminal Detail
--	--
--	--
667	Fence Detail
360, 368	Ramps H & I
503	Culvert Details

HORIZONTAL SCALE IN FEET
0 25 50 100

CALCULATED CHG
CHECKED LJS

PLAN AND PROFILE
U.S. BYPASS STA. 469+50 TO STA. 418+50

FAI-33-13.25

I:\pr\V3Stds\SamplePlans\Future Revision\1309\1309_4.dgn 03-OCT-2006 9:27AM mwawszki

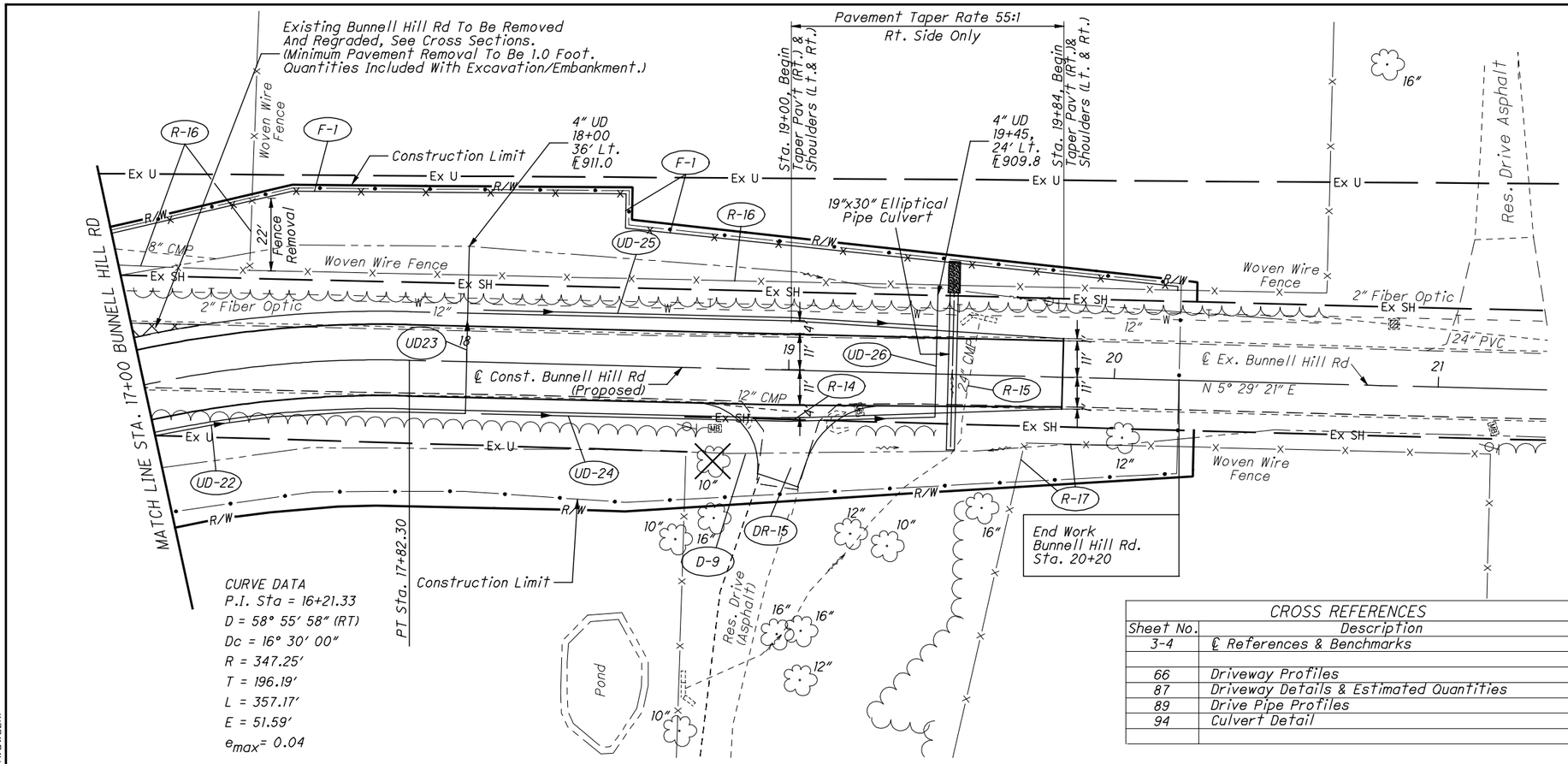

CROSS REFERENCES	
Sheet No.	Description
3-4	℄ References & Benchmarks
66	Driveway Profiles
87	Driveway Details & Estimated Quantities
89	Drive Pipe Profiles
94	Culvert Detail

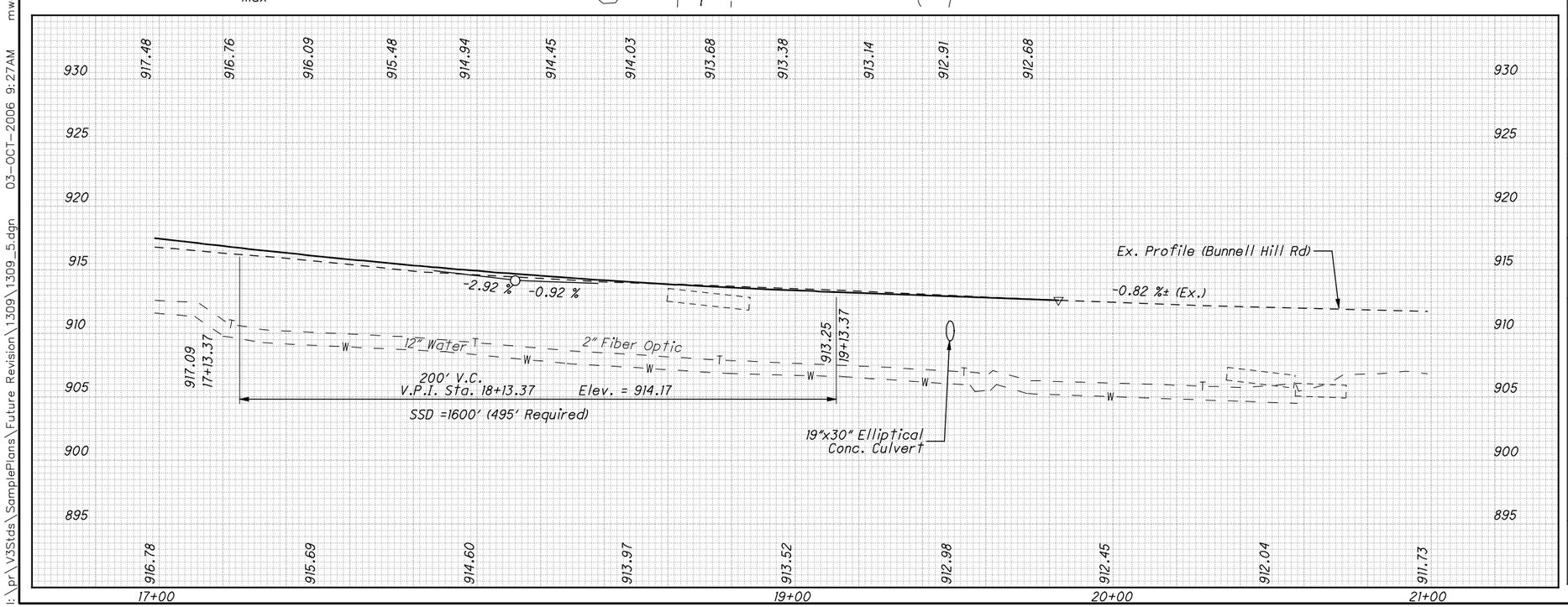

REF NO.	STATION FROM	STATION TO	SIDE	202 PIPE REMOVED, 24" AND UNDER	202 FENCE REMOVED	603 12" CONDUIT, TYPE D	603 4" CONDUIT, TYPE B	604 PRECAST REINF. CONCRETE OUTLET	605 4" SHALLOW PIPE UNDERDRAIN (24" DEEP)	605 4" BASE PIPE UNDERDRAIN (18" DEEP)	607 FENCE, TYPE 47RA	BENDS & BRANCHES FOR INFO. ONLY 45° BEND	BENDS & BRANCHES FOR INFO. ONLY 90° BEND
				FT	FT	FT	FT	EACH	FT	FT	FT		
R-14	18+86	19+20	Rt.	26									
R-15	19+52	19+55	Center	31									
R-16	16+60	20+20	Lt.		403								
R-17	19+70	20+19	Rt.		67								
UD-22	17+00	18+00	Rt.						96				
UD-23	18+00		Center				52	1				1	
UD-24	18+05	19+45	Rt.							140			
UD-25	18+05	19+45	Lt.							140			
UD-26	19+45		Center				37	1				2	
D-9	18+83	19+17	Rt.			33							
F-1	16+62	20+19	Lt.			33					390		
TOTALS CARRIED TO GENERAL SUMMARY				57	470	33	89	2	96	280	390		

HORIZONTAL SCALE IN FEET 0 10 20 40

CALCULATED MSQ
CHECKED JAD

PLAN AND PROFILE - BUNNELL HILL RD
STA. 17+00 TO STA 21+00

WAR-48.19.40

I:\pr\V3Stds\SamplePlans\Future Revision\1309\1309_5.dgn 03-OCT-2006 9:27AM mwawszki

CROSS REFERENCES	
Sheet No.	Description
3	℄ References & Benchmarks
38	Culvert Details

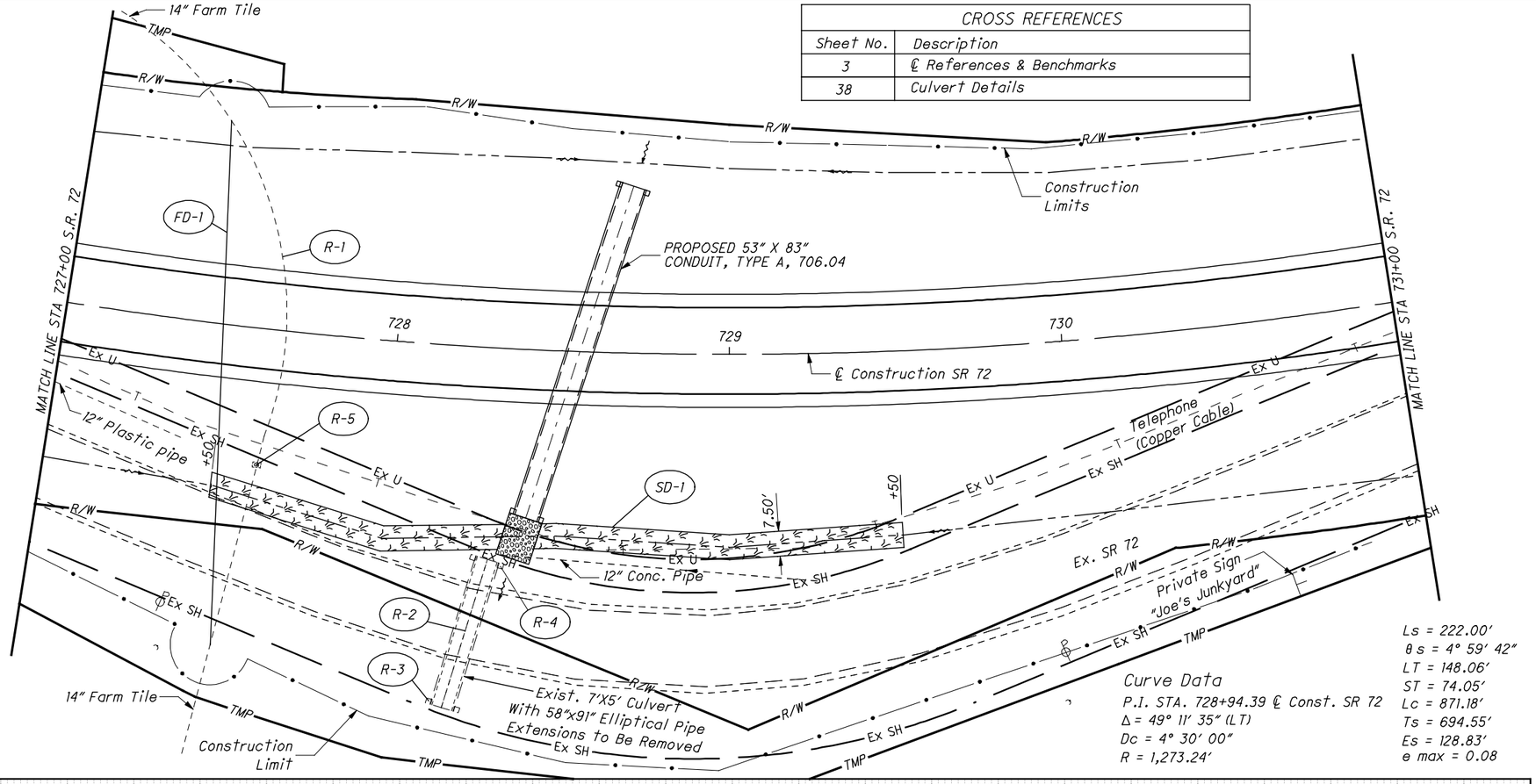

Curve Data
P.I. STA. 728+94.39 ℄ Const. SR 72
Δ = 49° 11' 35" (LT)
Dc = 4° 30' 00"
R = 1,273.24'

Ls = 222.00'
θs = 4° 59' 42"
LT = 148.06'
ST = 74.05'
Lc = 871.18'
Ts = 694.55'
Es = 128.83'
e max = 0.08

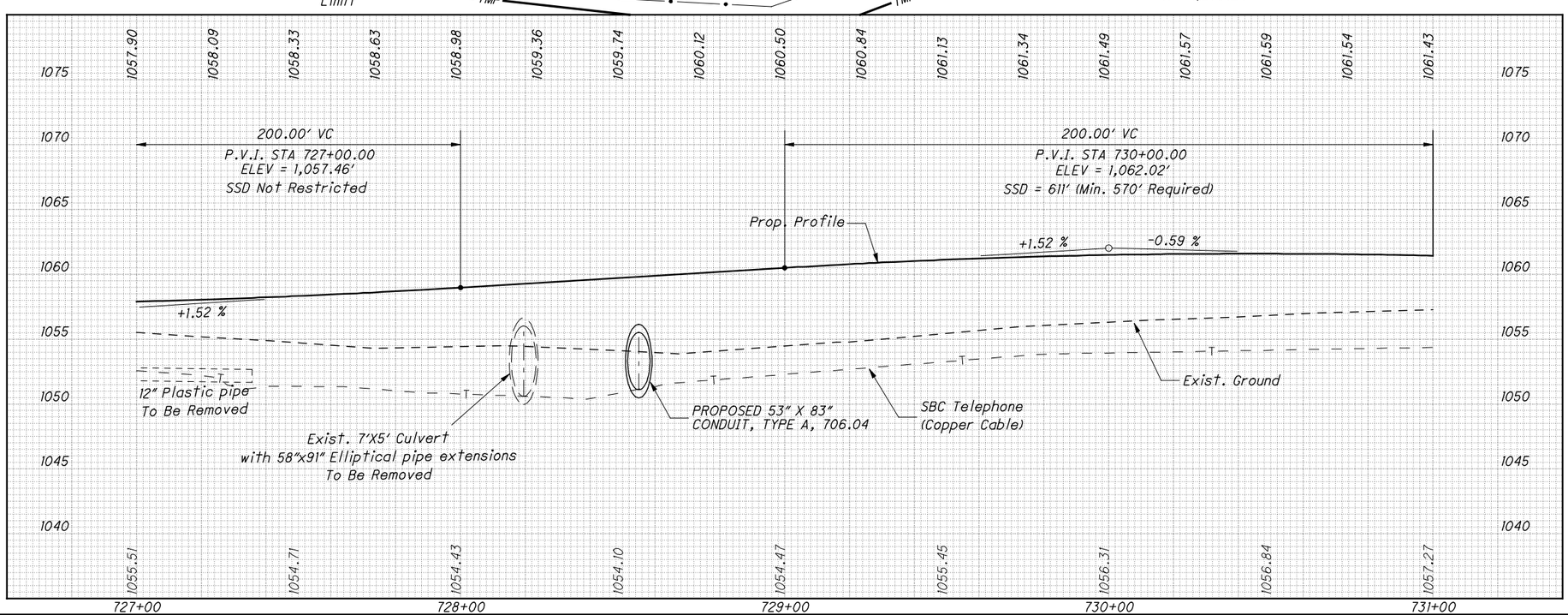

REF NO.	STATION FROM	STATION TO	SIDE	202 HEADWALL REMOVED	202 PIPE REMOVED, 24" AND UNDER	202 REMOVAL MISC.: 7'X5' CONCRETE BOX CULVERT WITH 58"X91" ELLIPTICAL PIPE EXTENSIONS	202 REMOVAL MISC.: 2'X2' FARM TILE JUNCTION BOX	603 15" CONDUIT, TYPE B	671 EROSION CONTROL MAT, TYPE A
				EACH	FT	EACH	EACH	FT	SQ. YD.
R-1	727+43	727+56	RT & LT		184				
R-2	728+15	728+22	RT			1			
R-3	728+17	728+23	RT	1					
R-4	728+27	728+35	RT	1					
R-5	728+51	728+53	RT				1		
FD-1	727+43	727+56	RT & LT					158	167
SD-1	727+50	729+50	RT						
TOTALS CARRIED TO GENERAL SUMMARY				2	184	1	1	158	167

SP 1309-6
DATE: OCTOBER 2006

HORIZONTAL SCALE IN FEET 0 10 20 40

CALCULATED MSQ
CHECKED JAD

PLAN AND PROFILE
STA 727+00 TO 731+00

GRE-72-13.67

I:\pr\V3Stds\SamplePlans\Future Revision\1309\1309_6.dgn 03-OCT-2006 9:27AM mwawszki

SP 1309-7(a)
DATE: OCTOBER 2006

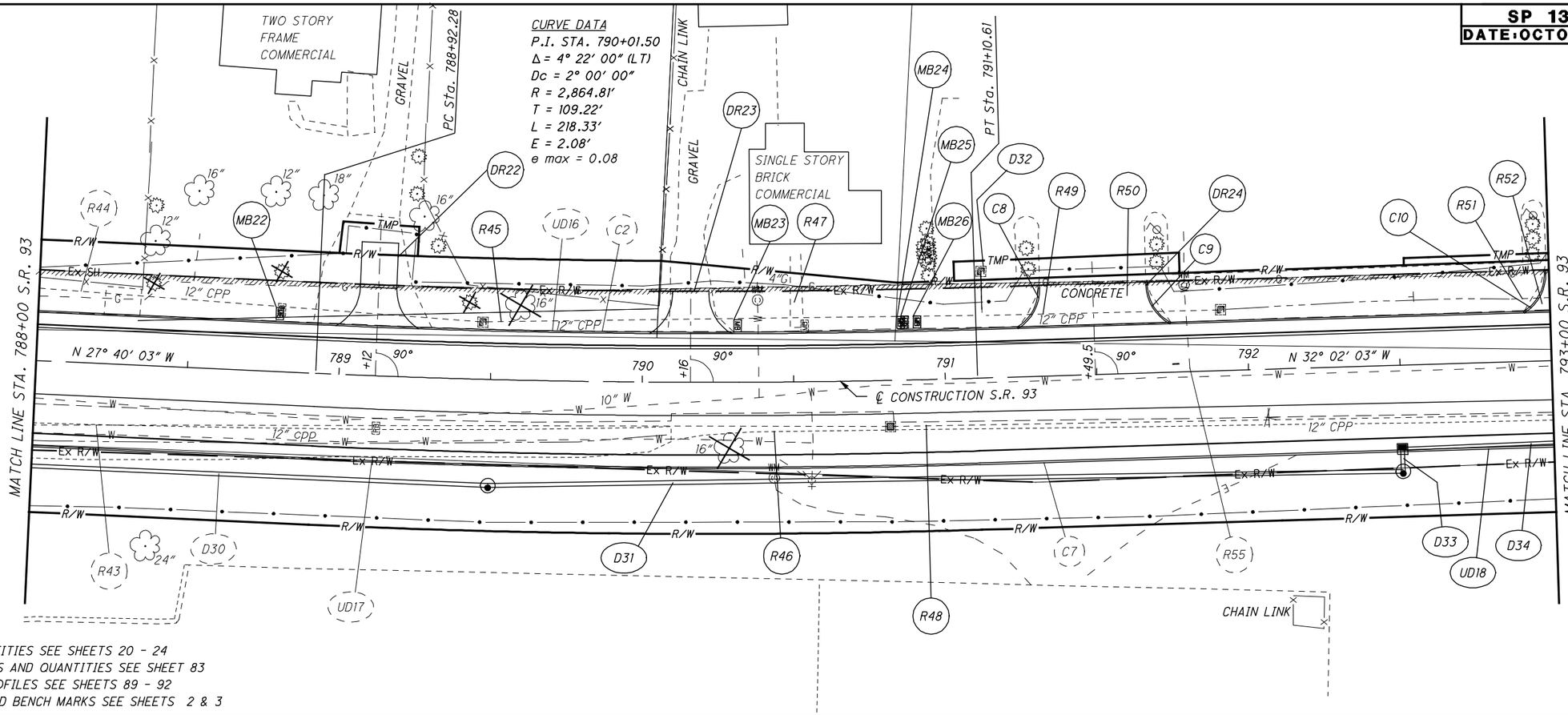

FOR ESTIMATED QUANTITIES SEE SHEETS 20 - 24
FOR DRIVEWAY DETAILS AND QUANTITIES SEE SHEET 83
FOR STORM SEWER PROFILES SEE SHEETS 89 - 92
FOR ℄ REFERENCES AND BENCH MARKS SEE SHEETS 2 & 3

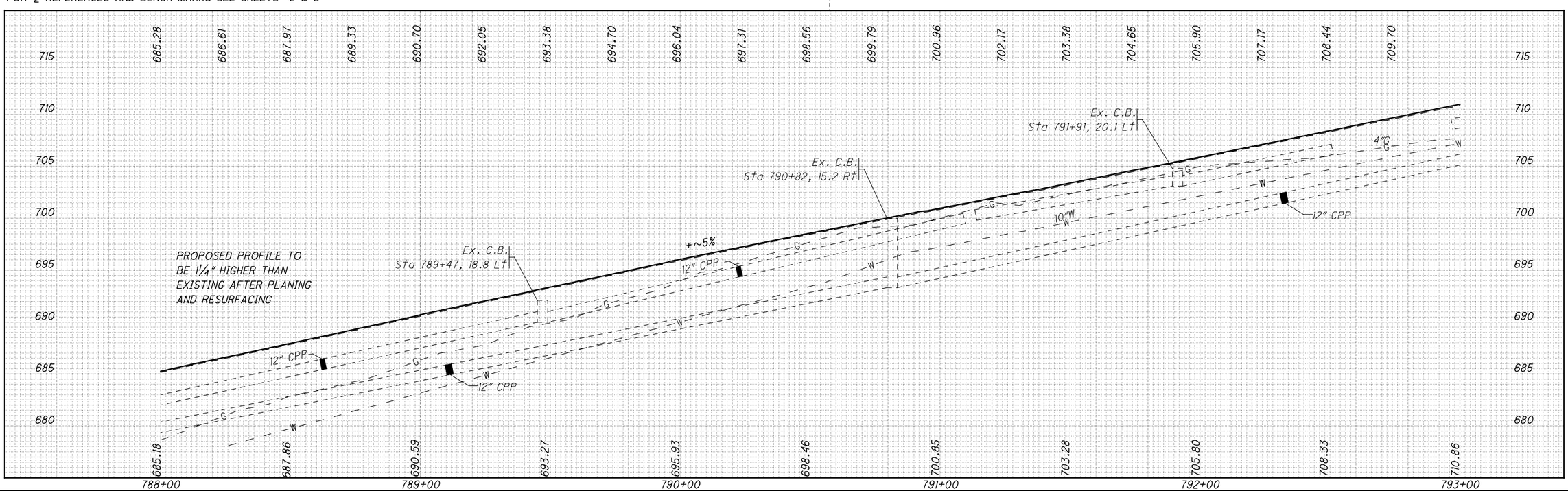

HORIZONTAL SCALE IN FEET 0 10 20 40

CALCULATED MSO
CHECKED JAD

PLAN AND PROFILE
STA. 788+00 TO STA. 793+00

MOE-93-22.35

I:\pr\V3Stds\SamplePlans\Future Revision\1309\1309_7(a).dgn 03-OCT-2006 9:27AM mwawszki

SP 1309-7(b)
DATE:OCTOBER 2006

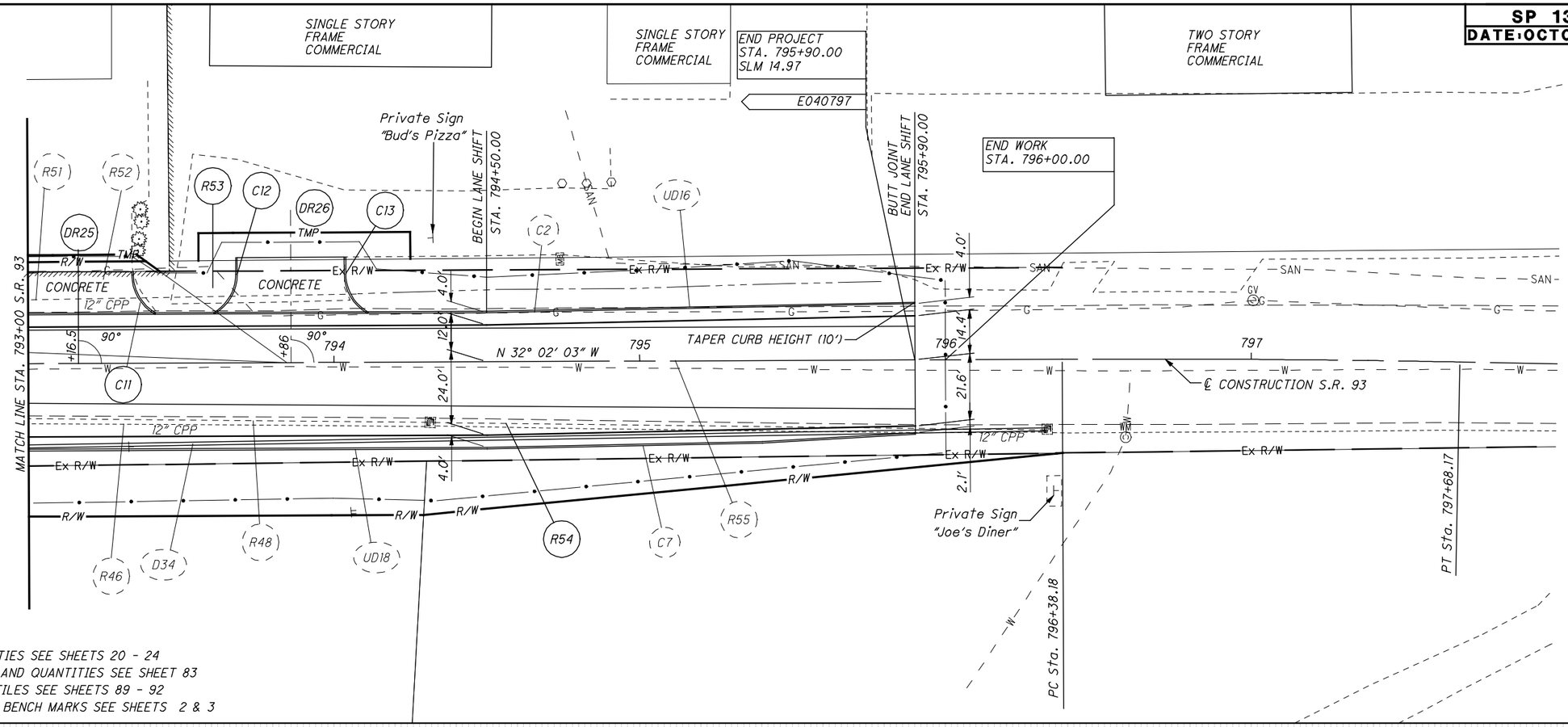

FOR ESTIMATED QUANTITIES SEE SHEETS 20 - 24
FOR DRIVEWAY DETAILS AND QUANTITIES SEE SHEET 83
FOR STORM SEWER PROFILES SEE SHEETS 89 - 92
FOR ℄ REFERENCES AND BENCH MARKS SEE SHEETS 2 & 3

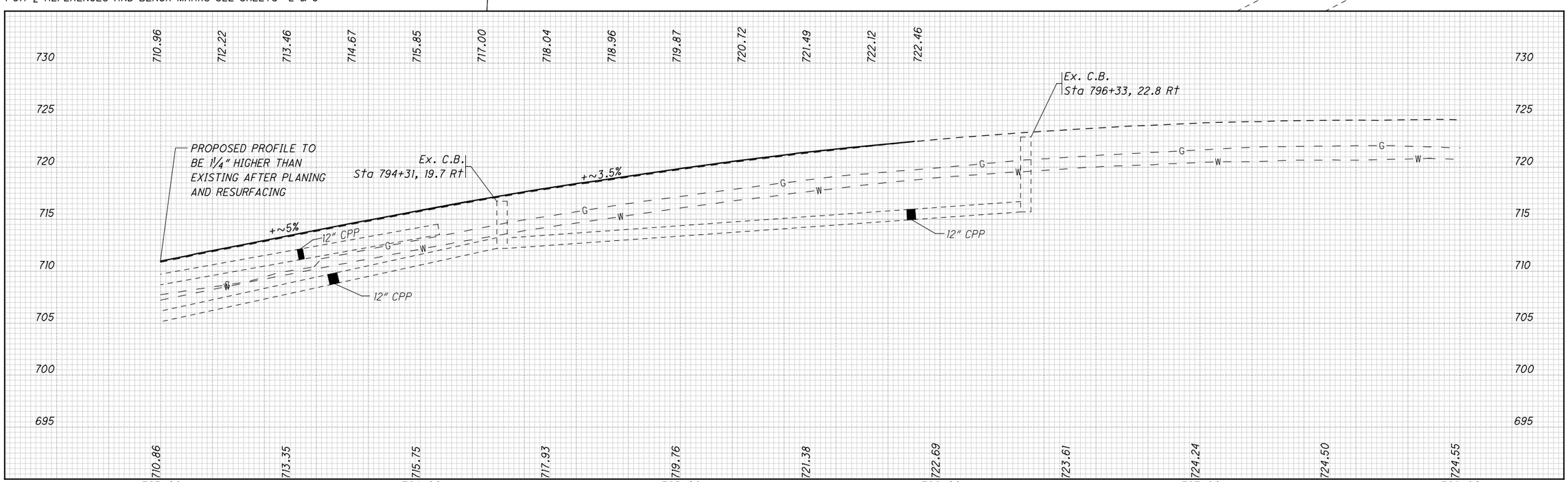

HORIZONTAL SCALE IN FEET 0 10 20 40

CALCULATED MSQ
CHECKED JAD

PLAN AND PROFILE
STA. 793+00 TO STA. 798+00

MOE-93-22.35

I:\pr\V3Stds\SamplePlans\Future Revision\1309\1309_7(b).dgn 03-OCT-2006 9:27AM mwawszki

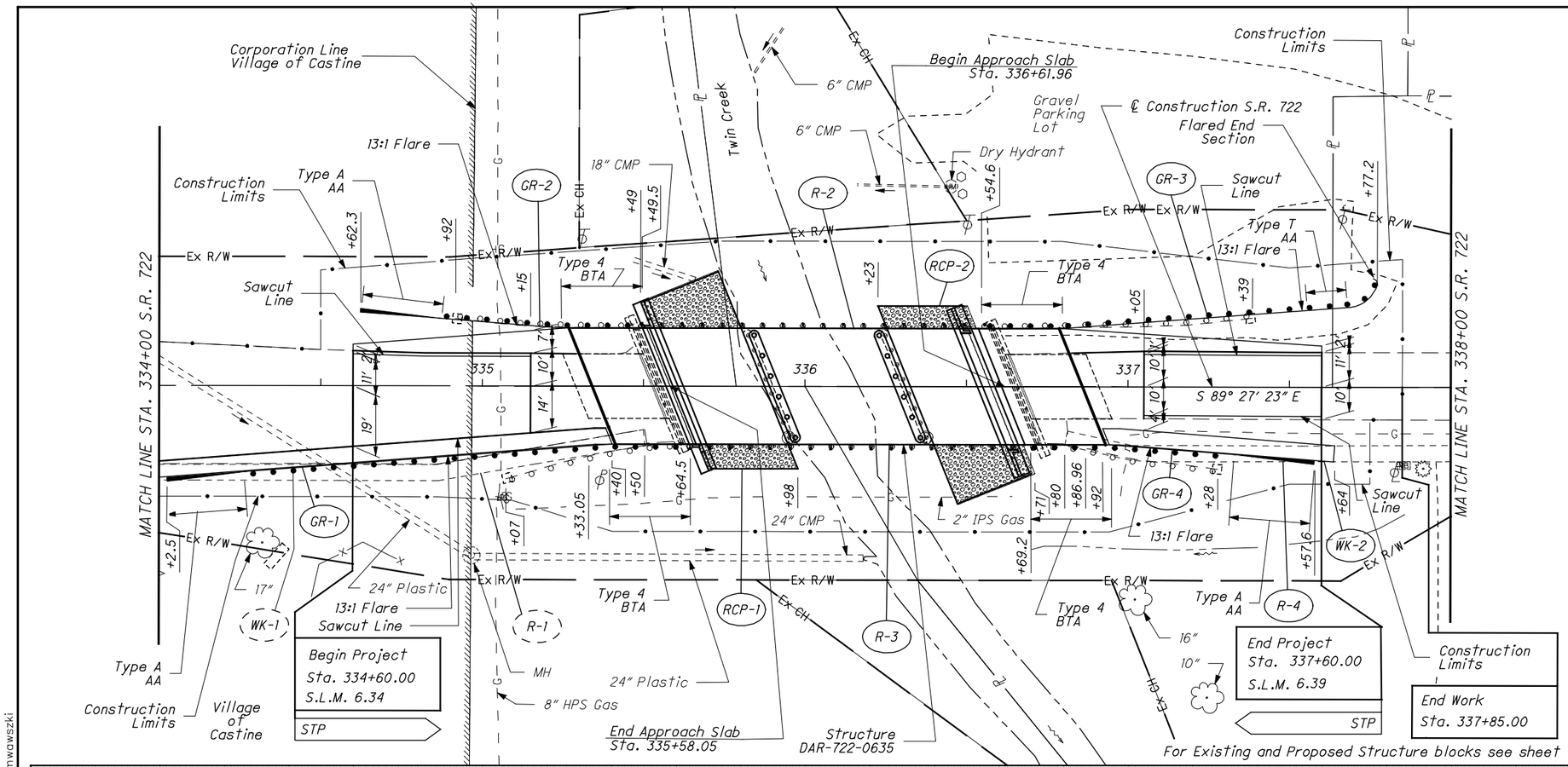

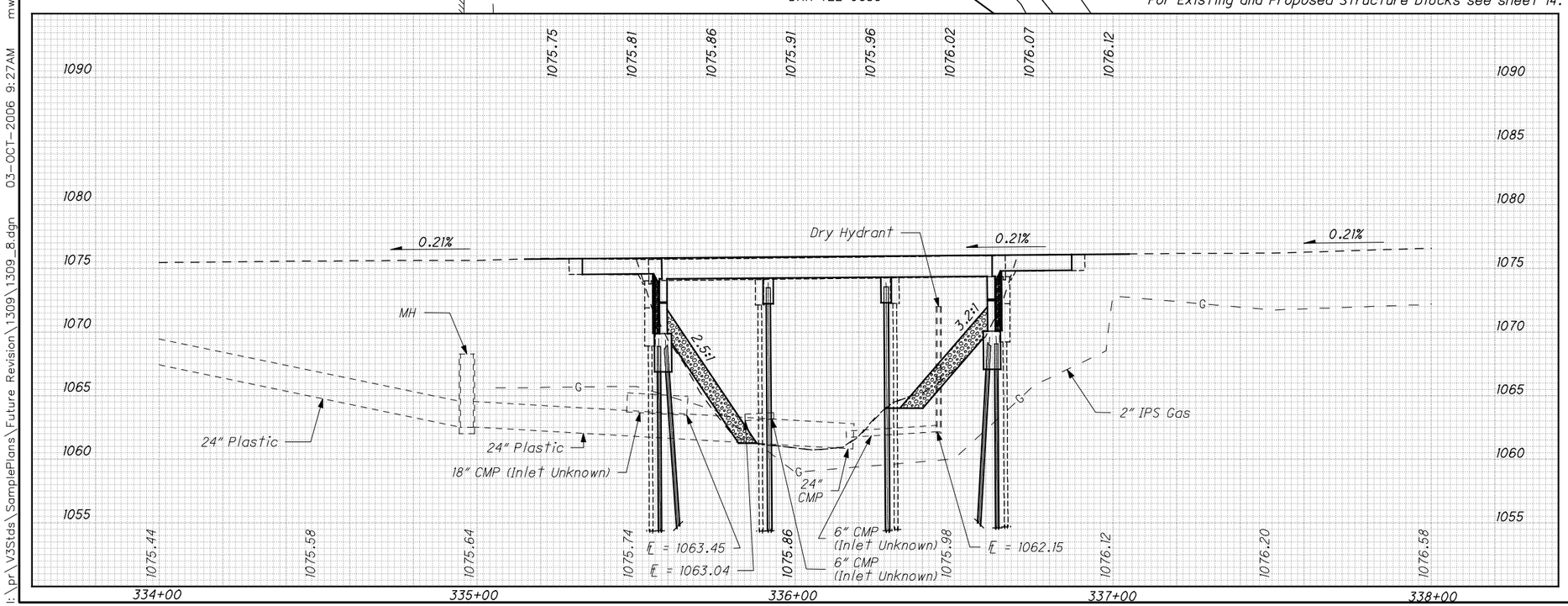

SP 1309-8
DATE: OCTOBER 2006

REF NO.	STATION FROM	STATION TO	SIDE	202 WALK REMOVED (SQ FT)	202 GUARDRAIL REMOVED (FT)	606 GUARDRAIL, TYPE 5 (FT)	606 ANCHOR ASSEMBLY, TYPE A (EACH)	606 ANCHOR ASSEMBLY, TYPE T (EACH)	606 BRIDGE TERMINAL ASSEMBLY, TYPE 4 (EACH)	608 4" CONCRETE WALK (SQ FT)	601 ROCK CHANNEL PROTECTION TYPE C WITH FILTER (CU YD)
GR-1	334+02.5	335+49.5	RT.			137.5	1		1		
GR-2	334+62.3	335+64.5	LT.			62.5	1		1		
GR-3	336+54.6	337+77.2	LT.			125		1	1		
GR-4	336+69.2	337+67.6	RT.			50.0	1		1		
R-2	334+92	337+39	LT.		250						120
R-3	335+07	337+28	RT		225						130
R-4	336+80	337+64	RT.	405							
RPC-1	335+49	335+98	LT/RT								
RPC-2	336+23	336+71	LT/RT								
WK-2	336+92	337+64	RT.							354	
TOTALS CARRIED TO GENERAL SUMMARY				405	475	387.5	3	1	4	354	250

HORIZONTAL SCALE IN FEET 0 10 20 40

CALCULATED JAR
CHECKED GFR

PLAN AND PROFILE - S.R. 722 STA. 334+00 TO STA. 338+00

DAR-722-6.34

I:\pr\V3Stds\SamplePlans\Future Revision\1309\1309_8.dgn 03-OCT-2006 9:27AM mwowszki

SP 1310-1
DATE: OCTOBER 2006

CALCULATED MTG
CHECKED CJM

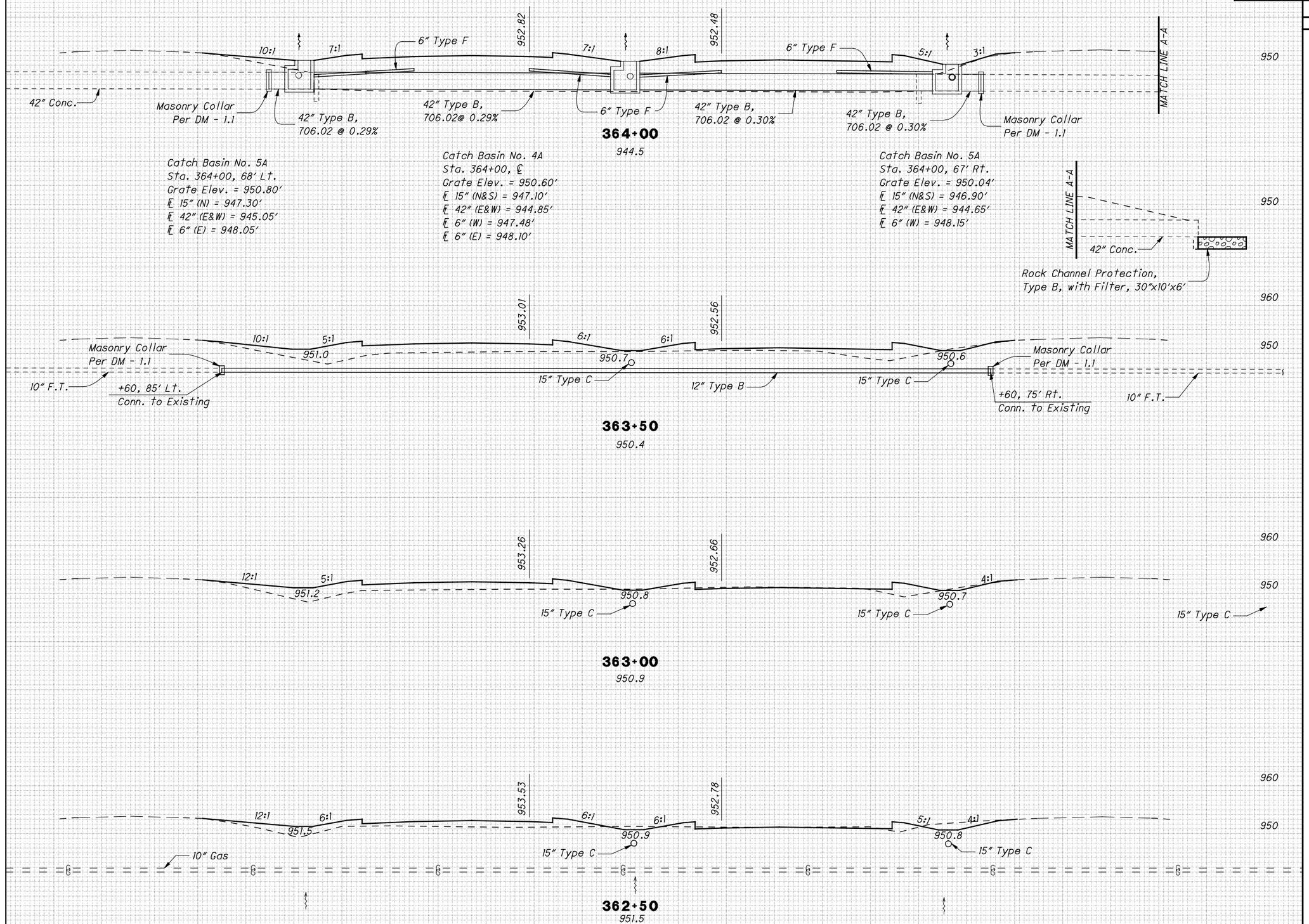

SEEDING END WIDTH	SEEDING SQ. YDS.		END AREA CUT	END AREA FILL	VOLUME CUT	VOLUME FILL
96			0	919		
	531				7	1054
95			8	219		
	528				24	346
95			18	155		
	528				40	250
95			25	115		
	528				67	187
	2115	SHEET TOTAL			138	1837

100 80 60 40 20 0 20 40 60 80 100

SHEET TOTAL

CROSS SECTIONS - S.R. 76
STA. 362+50 TO STA. 364+00

LUC-76-31.48

SEEDING END WIDTH	SEEDING SQ. YDS.
104	517
106	583
105	586
104	581
	2267 SHEET TOTAL

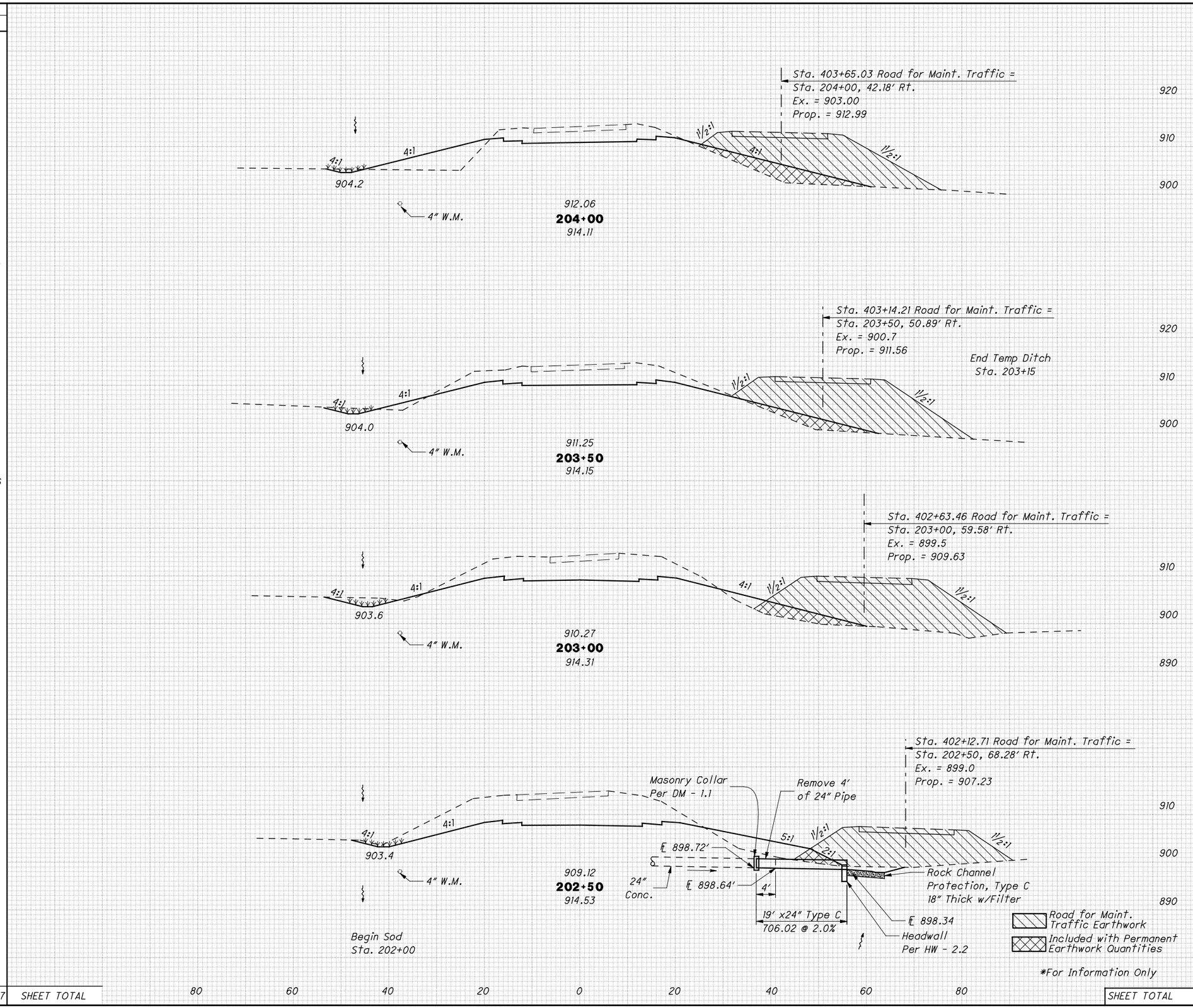

ROAD FOR MAINT. TRAFFIC END AREA CUT	END AREA FILL	VOLUME CUT	VOLUME FILL	END AREA CUT	END AREA FILL	VOLUME CUT	VOLUME FILL
						156	171
0	332			95	136		
		0	645			241	169
0	364			165	46		
		6	703			367	94
7	395			231	56		
		6	616			509	96
0	270			319	48		
		7	297				
SHEET TOTAL		*19	*2261			1273	530

SP 1310-2

DATE: OCT. 2006

CALCULATED RDN

CHECKED PDG

CROSS SECTIONS - S.R. 130
STA. 202+50 TO STA. 204+00

MED-130-1.23

SEEDING END WIDTH	SEEDING SQ. YDS.		END AREA CUT	END AREA FILL	VOLUME CUT	VOLUME FILL
68		369+00	42	30		
	378					
	-79	DRIVE 368+90 LT			4	2
68		368+50	24	35	61	60
	378					
					57	55
68		368+00	38	24		
		DRIVE 367+63 RT			5	2
	347				79	40
	-137	DRIVE 367+63 RT	47	19		
36		367+40				
	-135	DRIVE 367+16 RT				
	200				69	31
		DRIVE 367+16 RT			2	3
36		366+90	28	15		
	253				43	52
78		366+50	18	41		
	433				38	68
	-135	DRIVE 366+01 RT			2	3
78		366+00	23	32		
	1503	TOTAL			360	316

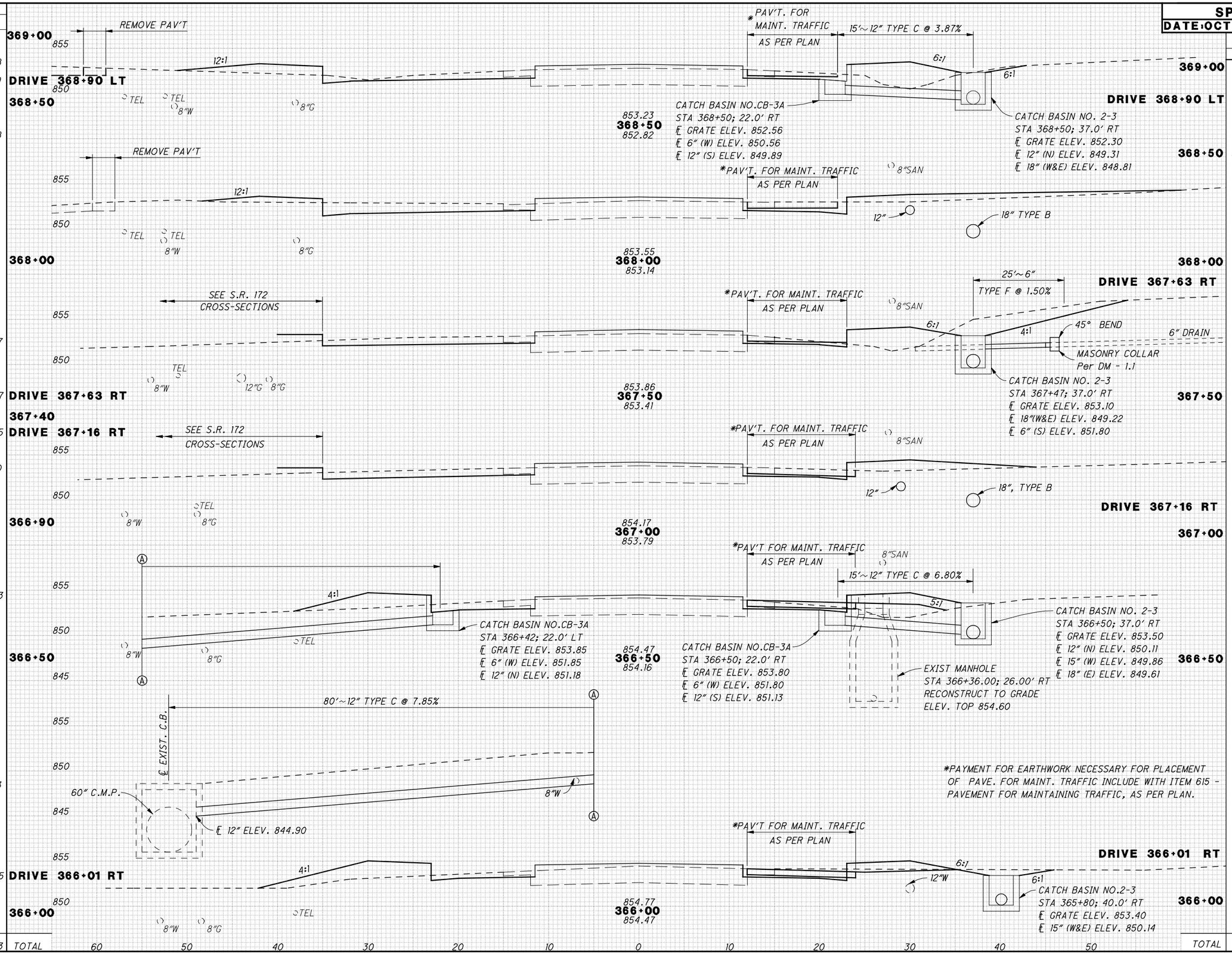

CROSS SECTIONS - S.R. 67
STA. 366+00 TO STA. 368+50

CLI-67-16.86

SEEDING END WIDTH	SEEDING SQ. YDS.	GEOTEXTILE FABRIC END WIDTH	GEOTEXTILE FABRIC SQ. YDS.
44		24	
	247		133
45		24	
	28		15
48		24	
	275		148

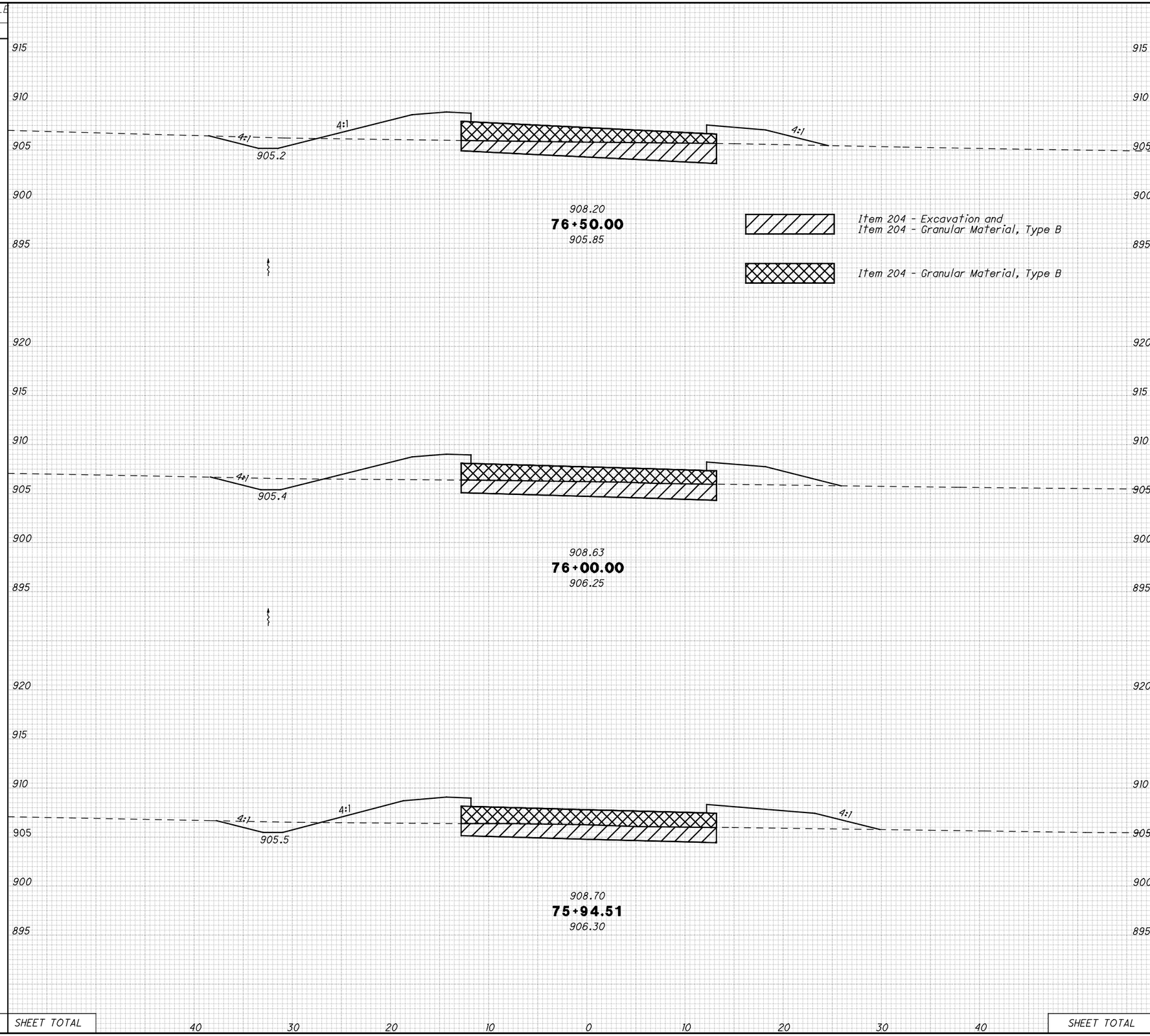

SHEET TOTAL

SP 1310-4

DATE:OCTOBER 2006

CALCULATED GFR

CHECKED JAD

ITEM 203 END AREA CUT	ITEM 203 END AREA FILL	ITEM 203 VOLUME CUT	ITEM 203 VOLUME FILL	ITEM 204 END AREA CUT	ITEM 204 END AREA FILL	ITEM 204 VOLUME CUT	ITEM 204 VOLUME FILL
7	41			40	78		
		14	77			72	144
8	42			38	78		
		2	9			8	16
7	51			37	78		
SHEET TOTAL		16	86			80	160

CROSS SECTIONS - RELOCATED BOUNDARIES RD (C.R. 9) STA. 75+92.89 TO STA. 76+50

PER/LIC-13-28.73/0.00

I:\pr\V3Stds\SamplePlans\Future Revision\1310\1310_4.dgn 03-OCT-2006 9:28AM mwawszki

CALCULATED RDN
CHECKED PDG

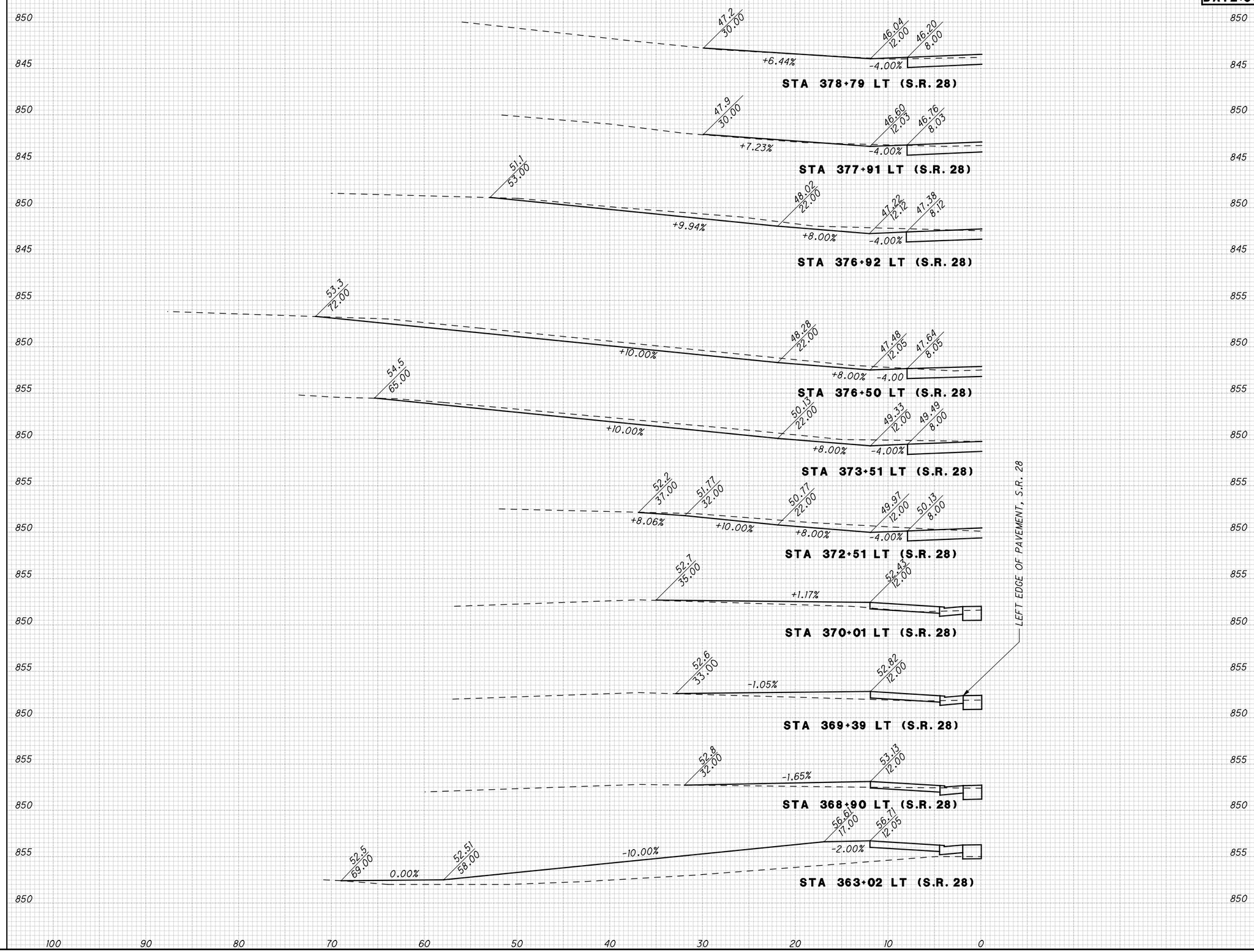

DRIVEWAY PROFILES

HUR-28-6.86

SP 1310-6
DATE: OCTOBER 2006

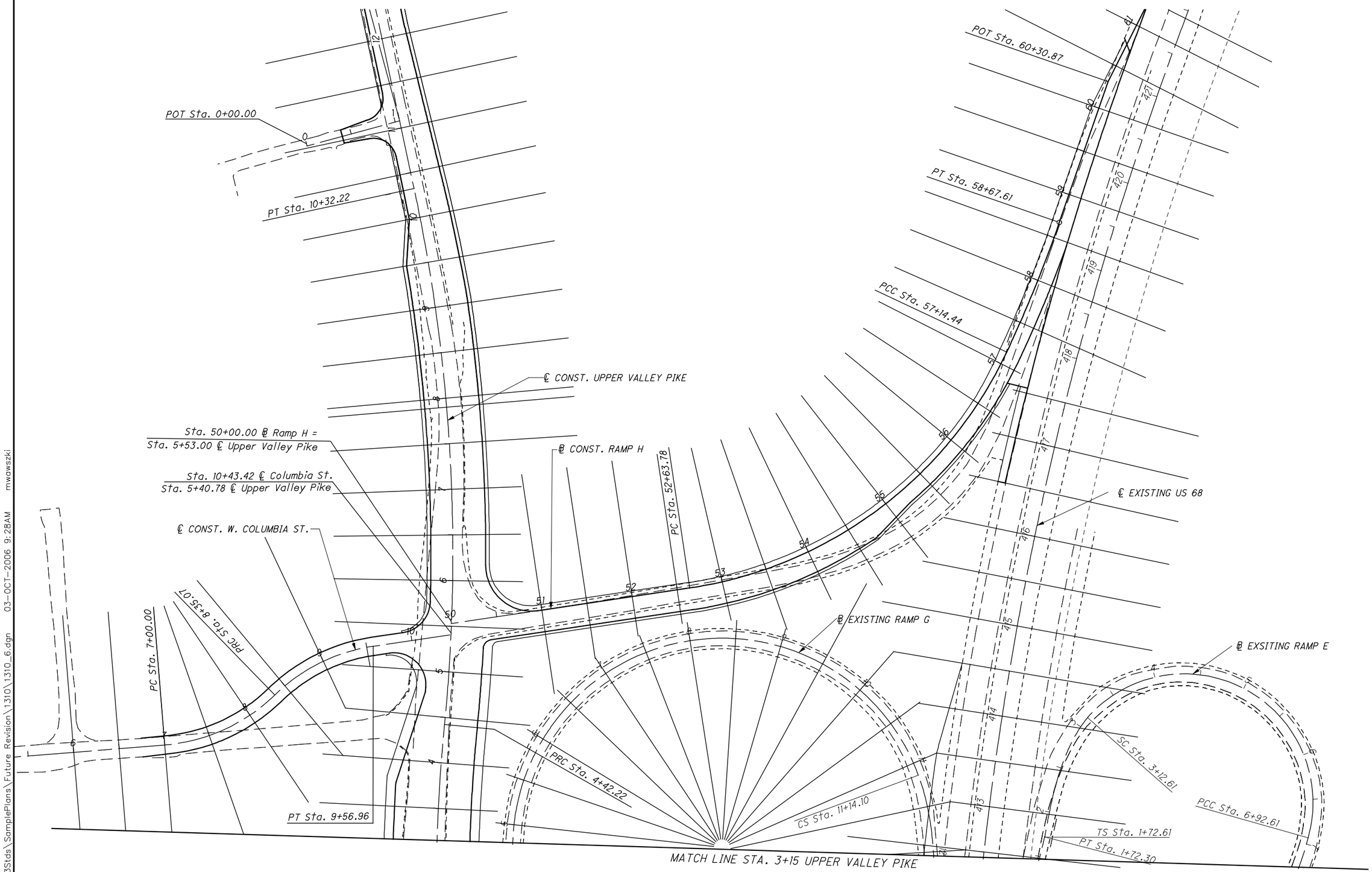

HORIZONTAL SCALE IN FEET
0 25 50 100

CALCULATED MSQ
CHECKED JAD

CROSS SECTION LAYOUT

CLA-40-10.18

I:\pr\V3Stds\SamplePlans\Future Revision\1310\1310_6.dgn 03-OCT-2006 9:28AM mwawszki

SUPERELEVATION TABLE

P. I. Station 20+00.00 | Dc = 6° 00′

LEFT SIDE					CENTERLINE CONTROL		RIGHT SIDE					
EDGE ELEVATION	TRANSITION RATE	*ELEVATION CORRECTION	CROSS SLOPE	WIDTH	STATION	PROFILE GRADE	WIDTH	CROSS SLOPE	*ELEVATION CORRECTION	TRANSITION RATE	EDGE ELEVATION	REMARKS
840.79		-0.17	-0.0156	11.01	14+95.00	840.96	11.01	-0.0156	-0.17		840.79	N.C.
840.81		-0.15	-0.0135	11.10	15+00.00	840.96	11.10	-0.0156	-0.17		840.79	
840.93		-0.03	-0.0026	11.55	15+25.00	840.96	11.55	-0.0156	-0.18		840.78	
840.96		0.00	0.0000	11.66	15+31.25	840.96	11.66	-0.0156	-0.18		840.78	½ LEVEL
841.05		+0.09	+0.0075	12.00	15+50.00	840.96	12.00	-0.0156	-0.19		840.77	
841.14		+0.19	+0.0156	12.00	15+68.80	840.96	12.00	-0.0156	-0.19		840.77	R.C.
841.17		+0.21	+0.0179	12.00	15+75.00	840.96	12.00	-0.0179	-0.21		840.75	
841.28	211:1	+0.33	+0.0278	12.00	16+00.00	840.95	12.00	-0.0278	-0.33		840.62	
841.40		+0.45	+0.0397	12.00	16+25.00	840.95	12.00	-0.0377	-0.45		840.50	
841.52		+0.57	+0.0476	12.00	16+50.00	840.95	12.00	-0.0476	-0.57		840.38	
841.61		+0.66	+0.0553	12.00	16+69.40	840.95	12.00	-0.0553	-0.66	211:1	840.29	P.C.
841.64		+0.69	+0.0575	12.00	16+75.00	840.95	12.00	-0.0575	-0.69		840.26	
841.76		+0.81	+0.0674	12.00	17+00.00	840.95	12.00	-0.0674	-0.81		840.14	
841.88		+0.93	+0.0773	12.00	17+25.00	840.95	12.00	-0.0773	-0.93		840.02	
841.95		+1.00	+0.0830	12.00	17+39.33	840.95	12.00	-0.0830	-1.00		839.95	
841.95		+1.00	+0.0830	12.00	17+50.00	840.95	12.00	-0.0830	-1.00		839.95	F.S.
842.00		+1.00	+0.0830	12.00	17+75.00	841.00	12.00	-0.0830	-1.00		840.00	
842.15		+1.00	+0.0830	12.00	18+00.00	841.25	12.00	-0.0830	-1.00		840.15	
842.42		+1.00	+0.0830	12.00	18+25.00	841.42	12.00	-0.0830	-1.00		840.42	
842.78		+1.00	+0.0830	12.00	18+50.00	841.78	12.00	-0.0830	-1.00		840.78	
843.26		+1.00	+0.0830	12.00	18+75.00	842.26	12.00	-0.0830	-1.00		841.26	
843.84		+1.00	+0.0830	12.00	19+00.00	842.84	12.00	-0.0830	-1.00		841.84	
844.52		+1.00	+0.0830	12.00	19+25.00	843.52	12.00	-0.0830	-1.00		842.52	
845.31		+1.00	+0.0830	12.00	19+50.00	844.31	12.00	-0.0830	-1.00		843.31	
846.21		+1.00	+0.0830	12.00	19+75.00	845.21	12.00	-0.0830	-1.00		844.21	
847.21		+1.00	+0.0830	12.00	20+00.00	846.21	12.00	-0.0830	-1.00		845.21	
848.32		+1.00	+0.0830	12.00	20+25.00	847.32	12.00	-0.0830	-1.00		846.32	
849.53		+1.00	+0.0830	12.00	20+50.00	848.53	12.00	-0.0830	-1.00		847.53	
850.85		+1.00	+0.0830	12.00	20+75.00	849.85	12.00	-0.0830	-1.00		848.85	
852.27		+1.00	+0.0830	12.00	21+00.00	851.27	12.00	-0.0830	-1.00		850.27	
853.80		+1.00	+0.0830	12.00	21+25.00	852.80	12.00	-0.0830	-1.00		851.80	
855.44		+1.00	+0.0830	12.00	21+50.00	854.44	12.00	-0.0830	-1.00		853.44	
857.18		+1.00	+0.0830	12.00	21+75.00	856.18	12.00	-0.0830	-1.00		855.18	
859.03		+1.00	+0.0830	12.00	22+00.00	858.03	12.00	-0.0830	-1.00		857.03	
860.98		+1.00	+0.0830	12.00	22+25.00	859.98	12.00	-0.0830	-1.00		858.98	
861.87		+1.00	+0.0830	12.00	22+35.95	860.87	12.00	-0.0830	-1.00		859.87	F.S.
862.96		+0.93	+0.0775	12.00	22+50.00	862.03	12.00	-0.0776	-0.93		861.10	
865.01		+0.81	+0.0677	12.00	22+75.00	864.20	12.00	-0.0677	-0.81		863.39	
867.16		+0.69	+0.0578	12.00	23+00.00	866.47	12.00	-0.0578	-0.69		865.78	
867.69		+0.67	+0.0554	12.00	23+05.94	867.02	12.00	-0.0554	-0.67	211:1	866.35	P.T.
869.41		+0.57	+0.0479	12.00	23+25.00	868.84	12.00	-0.0479	-0.57		868.27	
871.78		+0.46	+0.0380	12.00	23+50.00	871.32	12.00	-0.0380	-0.46		870.86	
874.19	211:1	+0.34	+0.0281	12.00	23+75.00	873.85	12.00	-0.0281	-0.34		873.51	
876.61		+0.22	+0.0182	12.00	24+00.00	876.39	12.00	-0.0182	-0.22		876.17	
877.24		+0.19	+0.0156	12.00	24+06.48	877.05	12.00	-0.0156	-0.19		876.86	R.C.
879.02		+0.10	+0.0083	12.00	24+25.00	878.92	12.00	-0.0156	-0.19		878.73	
881.03		0.00	0.0000	11.62	24+45.83	881.03	11.62	-0.0156	-0.18		880.85	½ LEVEL
881.43		-0.02	-0.0017	11.55	24+50.00	881.45	11.55	-0.0156	-0.18		881.27	
883.84		-0.14	-0.0126	11.10	24+75.00	883.98	11.10	-0.0156	-0.17		883.81	
884.47		-0.17	-.0.0156	10.98	24+81.50	884.64	10.98	-0.0156	-0.17		884.47	N.C.

* NEGATIVE CORRECTIONS MEANING BELOW PROFILE GRADE
POSITIVE CORRECTIONS MEANING ABOVE PROFILE GRADE.

SUPERELEVATION TABLE

P. I. Station 36+45.21 | Dc = 3° 00′

LEFT SIDE					CENTERLINE CONTROL		RIGHT SIDE					
EDGE ELEVATION	TRANSITION RATE	*ELEVATION CORRECTION	CROSS SLOPE	WIDTH	STATION	PROFILE GRADE	WIDTH	CROSS SLOPE	*ELEVATION CORRECTION	TRANSITION RATE	EDGE ELEVATION	REMARKS
606.93		-0.19	-0.0156	12.00	33+92.16	607.12	12.00	-0.0156	-0.19		606.93	N.C.
607.13		-0.16	-0.0133	12.00	34+00.00	607.29	12.00	-0.0156	-0.19		607.10	
607.76		-0.05	-0.0042	12.00	34+25.00	607.81	12.00	-0.0156	-0.19		607.62	
608.04		0.00	0.0000	12.00	34+37.09	608.04	12.00	-0.0156	-0.19		607.85	T.S.
608.34		+0.05	+0.0042	12.00	34+50.00	608.29	12.00	-0.0156	-0.19		608.10	
608.88		+0.16	+0.0133	12.00	34+75.00	608.72	12.00	-0.0156	-0.19		608.53	
609.02	236.5:1	+0.19	+0.0156	12.00	34+82.02	608.83	12.00	-0.0156	-0.19		608.64	R.C.
609.38		+0.27	+0.0225	12.00	35+00.00	609.11	12.00	-0.0225	-0.27		608.84	
609.84		+0.37	+0.0308	12.00	35+25.00	609.47	12.00	-0.0308	-0.37		609.10	
610.26		+0.48	+0.0400	12.00	35+50.00	609.78	12.00	-0.0400	-0.48	236.5:1	609.30	
610.63		+0.58	+0.0483	12.00	35+75.00	610.05	12.00	-0.0483	-0.58		609.47	
610.97		+0.69	+0.0575	12.00	36+00.00	610.28	12.00	-0.0575	-0.69		609.59	
611.12		+0.74	+0.0620	12.00	36+12.09	610.38	12.00	-0.0620	-0.74		609.64	S.C.
611.21		+0.74	+0.0620	12.00	36+25.00	610.47	12.00	-0.0620	-0.74		609.73	
611.36		+0.74	+0.0620	12.00	36+50.00	610.62	12.00	-0.0620	-0.74		609.88	
611.47		+0.74	+0.0620	12.00	36+75.00	610.73	12.00	-0.0620	-0.74		609.99	
611.48		+0.74	+0.0620	12.00	36+77.94	610.74	12.00	-0.0620	-0.74		610.00	C.S.
611.44		+0.65	+0.0542	12.00	37+00.00	610.79	12.00	-0.0542	-0.65		610.14	
611.36		+0.54	+0.0450	12.00	37+25.00	610.82	12.00	-0.0450	-0.54		610.28	
611.25		+0.44	+0.0367	12.00	37+50.00	610.81	12.00	-0.0367	-0.44	236.5:1	610.37	
611.08		+0.33	+0.0275	12.00	37+75.00	610.75	12.00	-0.0275	-0.33		610.42	
610.87	236.5:1	+0.22	+0.0183	12.00	38+00.00	610.65	12.00	-0.0183	-0.22		610.43	
610.80		+0.19	+0.0156	12.00	38+08.01	610.61	12.00	-0.0156	-0.19		610.42	R.C.
610.64		+0.12	+0.0100	12.00	38+25.00	610.52	12.00	-0.0156	-0.19		610.33	
610.35		+0.01	+0.0008	12.00	38+50.00	610.34	12.00	-0.0156	-0.19		610.15	
610.31		0.00	0.0000	12.00	38+52.94	610.31	12.00	-0.0156	-0.19		610.12	S.T.
610.03		-0.09	-0.0075	12.00	38+75.00	610.12	12.00	-0.0156	-0.19		609.93	
609.69		-0.19	-0.0156	12.00	38+97.87	609.88	12.00	-0.0156	-0.19		609.69	N.C.

SP 1311-1
DATE: OCTOBER 2006
CALCULATED KAK
CHECKED LJS

SUPERELEVATION TABLE

BEL-148-11.48

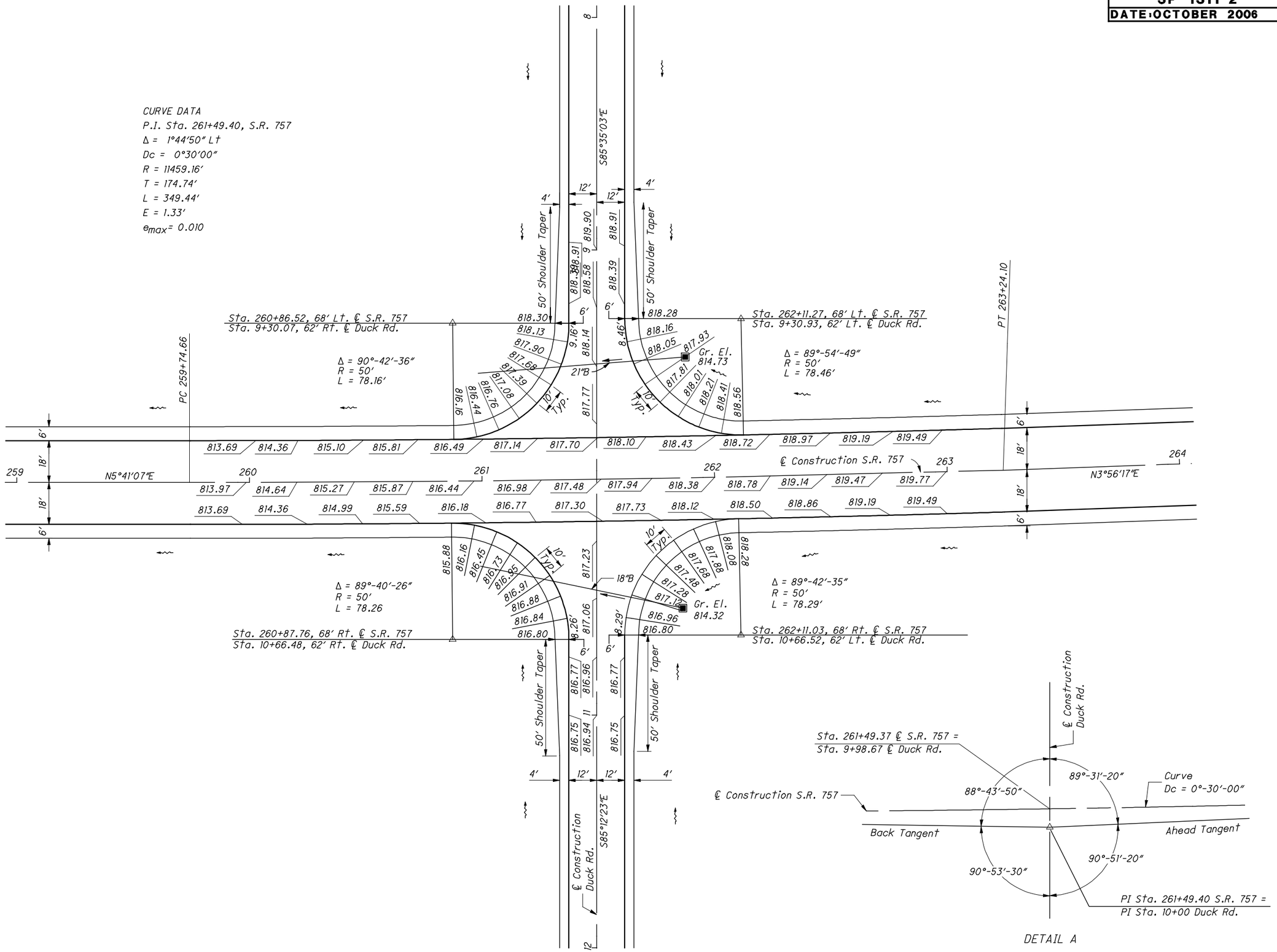

HORIZONTAL SCALE IN FEET
0 10 20 40

CALCULATED VHW
CHECKED TLH

INTERSECTION DETAIL - S.R. 757 & DUCK ROAD

MEG-757-1.23

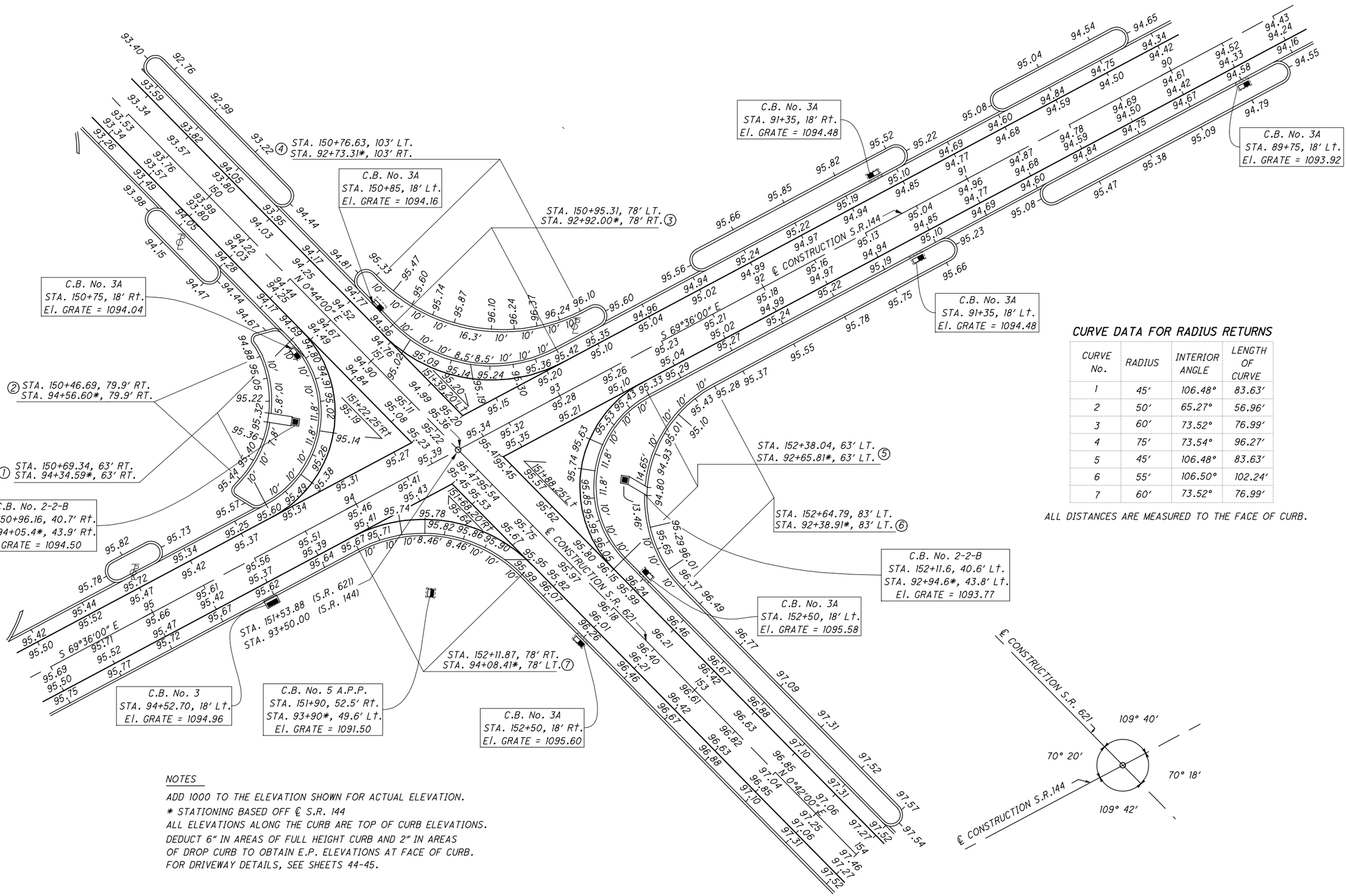

CURVE DATA FOR RADIUS RETURNS

CURVE No.	RADIUS	INTERIOR ANGLE	LENGTH OF CURVE
1	45′	106.48°	83.63′
2	50′	65.27°	56.96′
3	60′	73.52°	76.99′
4	75′	73.54°	96.27′
5	45′	106.48°	83.63′
6	55′	106.50°	102.24′
7	60′	73.52°	76.99′

ALL DISTANCES ARE MEASURED TO THE FACE OF CURB.

NOTES

ADD 1000 TO THE ELEVATION SHOWN FOR ACTUAL ELEVATION.
* STATIONING BASED OFF ℄ S.R. 144
ALL ELEVATIONS ALONG THE CURB ARE TOP OF CURB ELEVATIONS.
DEDUCT 6″ IN AREAS OF FULL HEIGHT CURB AND 2″ IN AREAS OF DROP CURB TO OBTAIN E.P. ELEVATIONS AT FACE OF CURB.
FOR DRIVEWAY DETAILS, SEE SHEETS 44-45.

HORIZONTAL SCALE IN FEET 0 10 20 40

CALCULATED WSR
CHECKED SJB

INTERSECTION DETAIL & PAVEMENT ELEVATIONS S.R. 621 AND S.R. 144

BEL-621-5.29

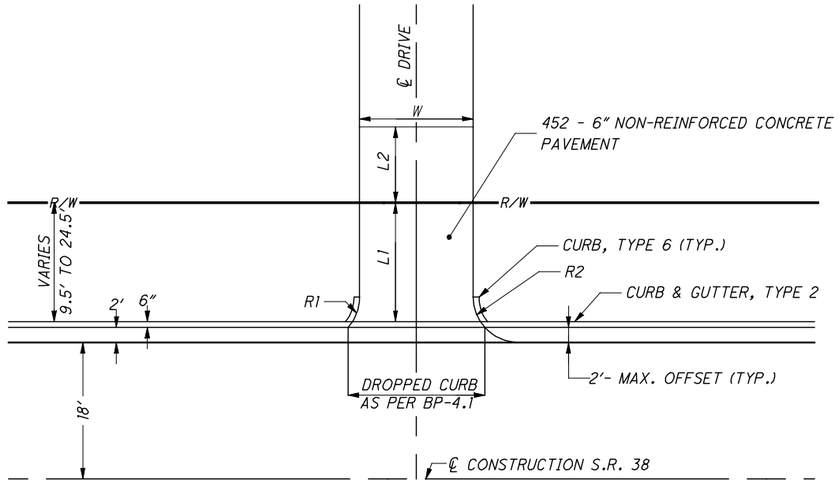

RESIDENTIAL DRIVES

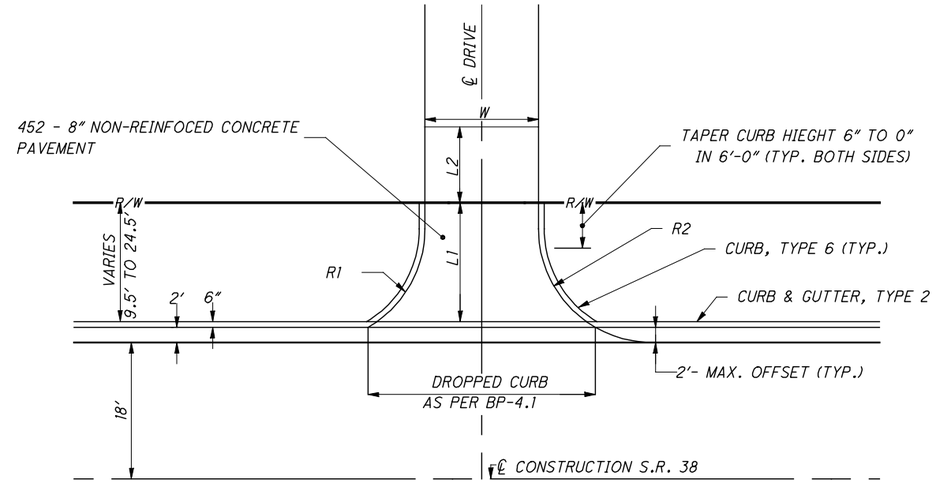

COMMERCIAL DRIVES WITHOUT WRAP-AROUND CURB

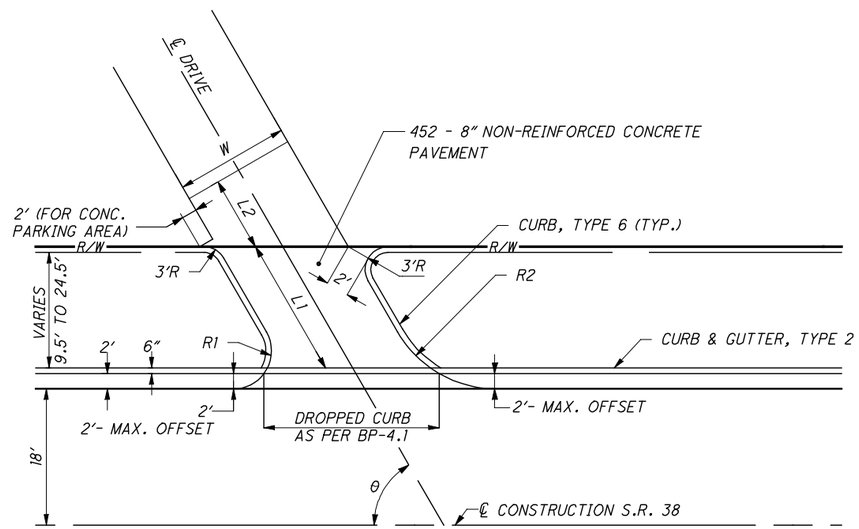

SERVICE STATION DRIVES
FOR θ, SEE PLAN/PROFILE SHEETS.

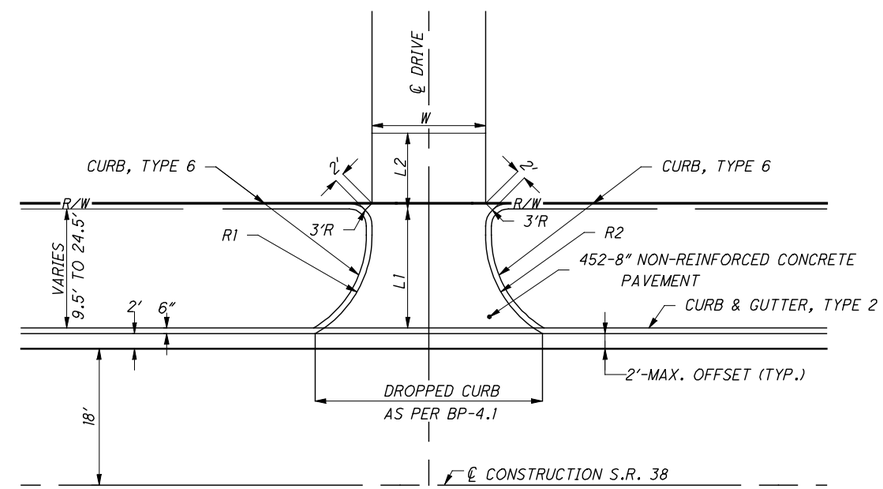

COMMERCIAL DRIVES WITH WRAP-AROUND CURB

RESIDENTIAL DRIVES

EXISTING AGGREGATE DRIVES

452 - 6" NON-REINFORCED CONCRETE PAVEMENT (APRON)
301 - 8" ASPHALT CONCRETE BASE, PG64-22

EXISTING ASPHALT DRIVES

452 - 6" NON-REINFORCED CONCRETE PAVEMENT (APRON)
301 - 2" ASPHALT CONCRETE BASE, PG64-22
407 - TACK COAT FOR INTERMEDIATE COURSE (0.075 GAL./SQ. YD.)
304 - 6" AGGREGATE BASE

EXISTING CONCRETE DRIVES

452 - 6" NON-REINFORCED CONCRETE PAVEMENT (APRON)

COMMERCIAL AND SERVICE STATION DRIVES

EXISTING AGGREGATE DRIVE

452 - 8" NON-REINFORCED CONCRETE PAVEMENT (APRON)
304 - 10" AGGREGATE BASE

EXISTING ASPHALT DRIVE

452 - 8" NON-REINFORCED CONCRETE PAVEMENT (APRON)
446 - 1¼" ASPHALT CONCRETE SURFACE COURSE, TYPE 1H, PG76-22
446 - 1¾" ASPHALT CONCRETE, INTERMEDIATE COURSE, TYPE 1, PG64-22
407 - TACK COAT FOR INTERMEDIATE COURSE (0.075 GAL./SQ. YD.)
304 - 8" AGGREGATE BASE

EXISTING CONCRETE DRIVE

452 - 8" NON-REINFORCED CONCRETE PAVEMENT (APRON)

SEE SHEET 41 FOR DRIVEWAY QUANTITIES.

HORIZONTAL SCALE IN FEET 0 5 10 20

DRIVEWAY DETAILS

CAR-38-22.56

SP 1311-5

DATE: OCTOBER 2006

CALCULATED WSR | CHECKED SJB

SHEET NO.	REFERENCE NO.	STATION	SIDE	DRIVE TYPE	APRON LENGTH "L1"	DRIVEWAY LENGTH "L2"	WIDTH "W"	R1 (LEFT SIDE RADII OF DRIVE LOOKING FROM ℄)	R2 (RIGHT SIDE RADII OF DRIVE LOOKING FROM ℄)	202 PAVEMENT REMOVED	203 EMBANKMENT	203 EXCAVATION		301 8" ASPHALT CONCRETE BASE, PG64-22	304 6" AGGREGATE BASE	304 8" AGGREGATE BASE	304 10" AGGREGATE BASE		407 TACK COAT FOR INTERMEDIATE COURSE (0.075 GAL./SQ. YD.)	446 1¾" ASPHALT CONCRETE, INTERMEDIATE COURSE, TYPE 1, PG64-22	446 1 ¼" ASPHALT CONCRETE SURFACE COURSE, TYPE 1H, PG76-22		452 6" NON-REINFORCED CONCRETE PAVEMENT	452 8" NON-REINFORCED CONCRETE PAVEMENT	
					FT.	FT.	FT.	FT.	FT.	SQ. YD.	CU. YD.	CU. YD.		CU. YD.	CU. YD.	CU. YD.	CU. YD.		GAL.	CU. YD.	CU. YD.		SQ. YD.	SQ. YD.	
71	DR-1	695+70	RT	COMM.	9.50	13.0	35.0	15.0	15.0	186.6		8												120.7	
71	DR-2	696+27.03	RT	COMM.	11.0	17.0	12.0	15.0	6.00			5		1.1		5.2			9.3		0.8			17.1	
71	DR-3	696+62	RT	COMM.	9.50	15.0	35.0	15.0	15.0	217.7		7												218.9	
		PARKING	RT							111.7		26		2.2		10.6			19.0		1.6				
71	DR-4	697+25	LT	COMM.	9.50	20.0	26.0	15.0	15.0			19		2.8		12.8			23.1		2.0			31.8	
71	DR-5	697+68	RT	COMM.	9.50	10.0	35.0	15.0	15.0	141.7		11												85.6	
71	PARKING TO 698+00		RT							26.1		12												26.1	
74	DR-1	10+75	RT	COMM.	17.5	--	35.0	15.0	3.00	67.7		4												66.2	
		2ND ST. N.W.																							
74	DR-2	10+36	LT	RES.	17.0	23.3	8.00	4.00	6.00			15			2.7				6.4	0.9			30.0		
		2ND ST. N.W.																							
74	DR-3	698+87	LT	COMM.	9.50	28.0	25.0	15.0	15.0		6	10		3.8	17.3				31.1		2.7			32.0	
74	DR-4	699+96	RT	RES.	10.0	9.50	15.0	6.00	6.00			13		3.9									7.8		
		PARKING								29.3		5		3.1									1.6		
74	DR-5	700+77	RT	COMM.	9.50	5.00	35.0	15.0	15.0			16					6.5							40.7	
		PARKING	RT									2					2.0								
74	DR-6	701+32	RT	COMM.	10.0	11.0	21.0	--	6.00			6					6.2							27.1	
76	DR-1	702+45	RT	COMM.	9.50	12.5	35.0	15.0	15.0	165.6	16													94.9	
		PARKING								53.7	3													53.7	
76	DR-2	703+60	RT	COMM.	10.0	26.5	35.0	15.0	15.0			29		5.5		24.8			44.7		3.9			51.8	
76	DR-3	706+69	LT	RES.	9.50	5.00	13.0	6.00	6.00			3		1.5									14.4		
76	DR-4	704+21	LT	RES.	9.50	5.00	21.0	6.00	6.00		1	1		1.5									14.4		
76	DR-5	705+14	LT	RES.	9.50	--	28.0	6.00	6.00		4												29.1		
77	DR-1	706+39	LT	RES.	9.50	5.00	8.00	6.00	6.00			2		1.0									8.7		
77	DR-2	707+44	LT	RES.	9.50	1.00	12.0	6.00	6.00			5			0.2				0.5	0.1			13.1		
77	DR-3	708+05	RT	COMM.	9.50	9.50	35.0	15.0	15.0			22		1.0		4.2			7.6		0.7			41.1	
		PARKING										11		1.8		8.0			14.4		1.3				
77	DR-4	709+01	RT	COMM.	9.50	5.00	19.0	15.0	15.0			5		0.6		2.8			5.1		0.4			24.0	
77	DR-5	709+81	LT	RES.	9.50	10.5	17.0	6.00	6.00			5			1.8				4.2	0.6			19.6		
		PARKING										3			3.7				8.9	1.2					
77	DR-6	10+51	LT	COMM.	17.0	17.5	16.0	15.0	2.30															35.6	
		5TH ST. N.W.																							
77	DR-7	10+67	LT	RES.	17.0	--	6.00	2.30	6.00	35.6													18.9		
		5TH ST. N.W.																							
78	DR-1	710+44	LT	COMM.	9.50	10.0	21.5	15.0	15.0			13		1.4		6.7			12.0		1.0			29.1	
		PARKING										17		3.1		13.7			24.7		2.2				
78	DR-2	711+08	LT	RES.	9.50	39.0	17.0	6.00	6.00		2	7			9.1				21.9	3.0			20.2		
78	DR-3	711+58	RT	COMM.	9.50	6.00	35.0	15.0	15.0			15		1.4		6.4			11.5		1.0			42.7	
		PARKING										16		2.8		12.8			23.1		2.0				
78	DR-4	711+96	LT	COMM.	9.50	16.5	35.0	15.0	5.00			16		3.9		17.9			32.3		2.8			40.9	
		PARKING										14		2.2		10.4			18.7		1.6				
78	DR-5	712+53	RT	COMM.	9.50	3.00	35.0	15.0	15.0			15					3.9							42.7	
		PARKING	RT									2					2.1								
78	DR-6	713+39	LT	COMM.	9.50	13.0	35.0	5.00	15.0			9		2.8		12.8			23.1		2.0			36.4	
		PARKING	LT									1		0.1		0.7			1.3		0.1				
78	DR-7	713+18	RT	COMM.	9.50	3.00	35.0	15.0	15.0			15					3.8							42.7	
		PARKING	RT									6		1.0		4.4			8.0		0.7				
78	DR-8	713+64	LT	RES.	9.50	20.0	14.0	6.00	6.00		1	2		6.4									16.2		
TOTALS CARRIED TO GENERAL SUMMARY										1036	33	393		55	214				351	33			194	1202	

DRIVEWAY SUBSUMMARY

CAR-38-22.56

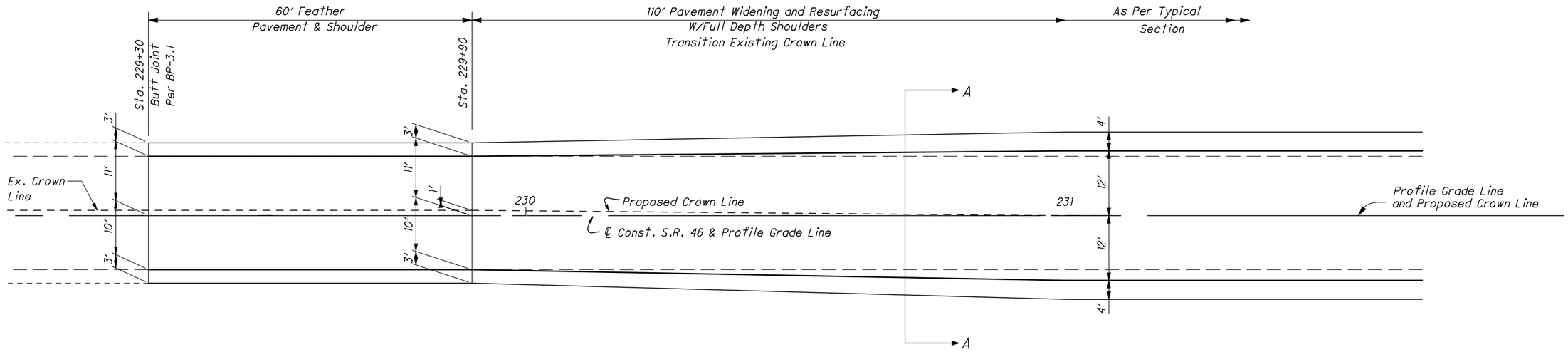

PAVEMENT TRANSITION DETAIL

LEGEND

1	ITEM 301 - 5" ASPHALT CONCRETE BASE, PG64-22
2	ITEM 304 - 6" AGGREGATE BASE
3	ITEM 407 - TACK COAT (Applied at a rate of 0.075 gal/yd²)
4	ITEM 407 - TACK COAT FOR INTERMEDIATE COURSE (Applied at a rate of 0.075 gal/yd²)
5	ITEM 408 - PRIME COAT (Applied at a rate of 0.4 gal/yd²)
6	ITEM 446 - 1¼" ASPHALT CONCRETE SURFACE COURSE, TYPE 1, PG64-22
7	ITEM 446 - 1¾" ASPHALT CONCRETE INTERMEDIATE COURSE, TYPE 2, PG64-22
A	± 5" Asphalt
B	± 8" Macadam Base

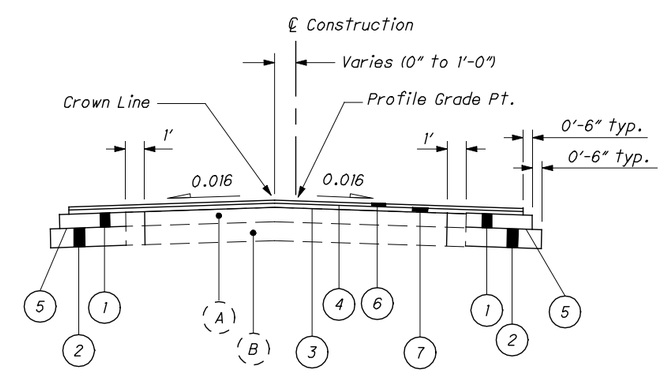

SECTION A-A

HORIZONTAL SCALE IN FEET
0 5 10 20

PAVEMENT TRANSITION DETAILS

PIC-46-27.22

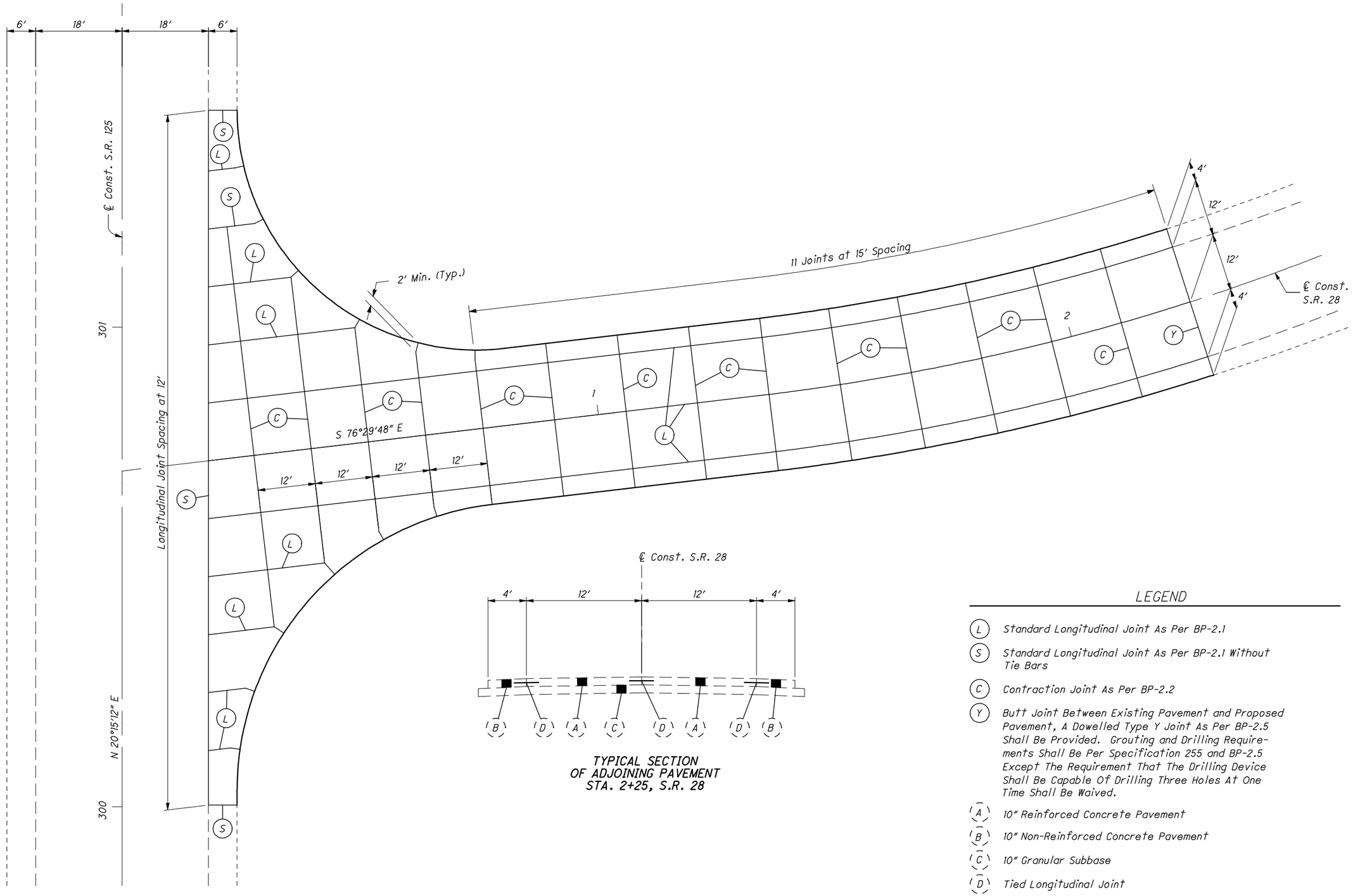

LEGEND

- (L) Standard Longitudinal Joint As Per BP-2.1
- (S) Standard Longitudinal Joint As Per BP-2.1 Without Tie Bars
- (C) Contraction Joint As Per BP-2.2
- (Y) Butt Joint Between Existing Pavement and Proposed Pavement, A Dowelled Type Y Joint As Per BP-2.5 Shall Be Provided. Grouting and Drilling Requirements Shall Be Per Specification 255 and BP-2.5 Except The Requirement That The Drilling Device Shall Be Capable Of Drilling Three Holes At One Time Shall Be Waived.
- (A) 10″ Reinforced Concrete Pavement
- (B) 10″ Non-Reinforced Concrete Pavement
- (C) 10″ Granular Subbase
- (D) Tied Longitudinal Joint

HORIZONTAL SCALE IN FEET
0 5 10 20

CALCULATED AAM
CHECKED DEM

PAVEMENT JOINT DETAIL S.R. 28

LOR-28-0.00

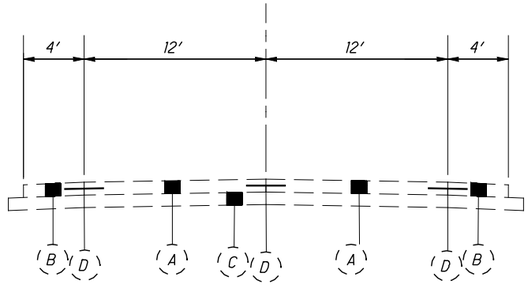

TYPICAL SECTION OF
ADJOINING PAVEMENT S.R. 329

Sta. 10+82

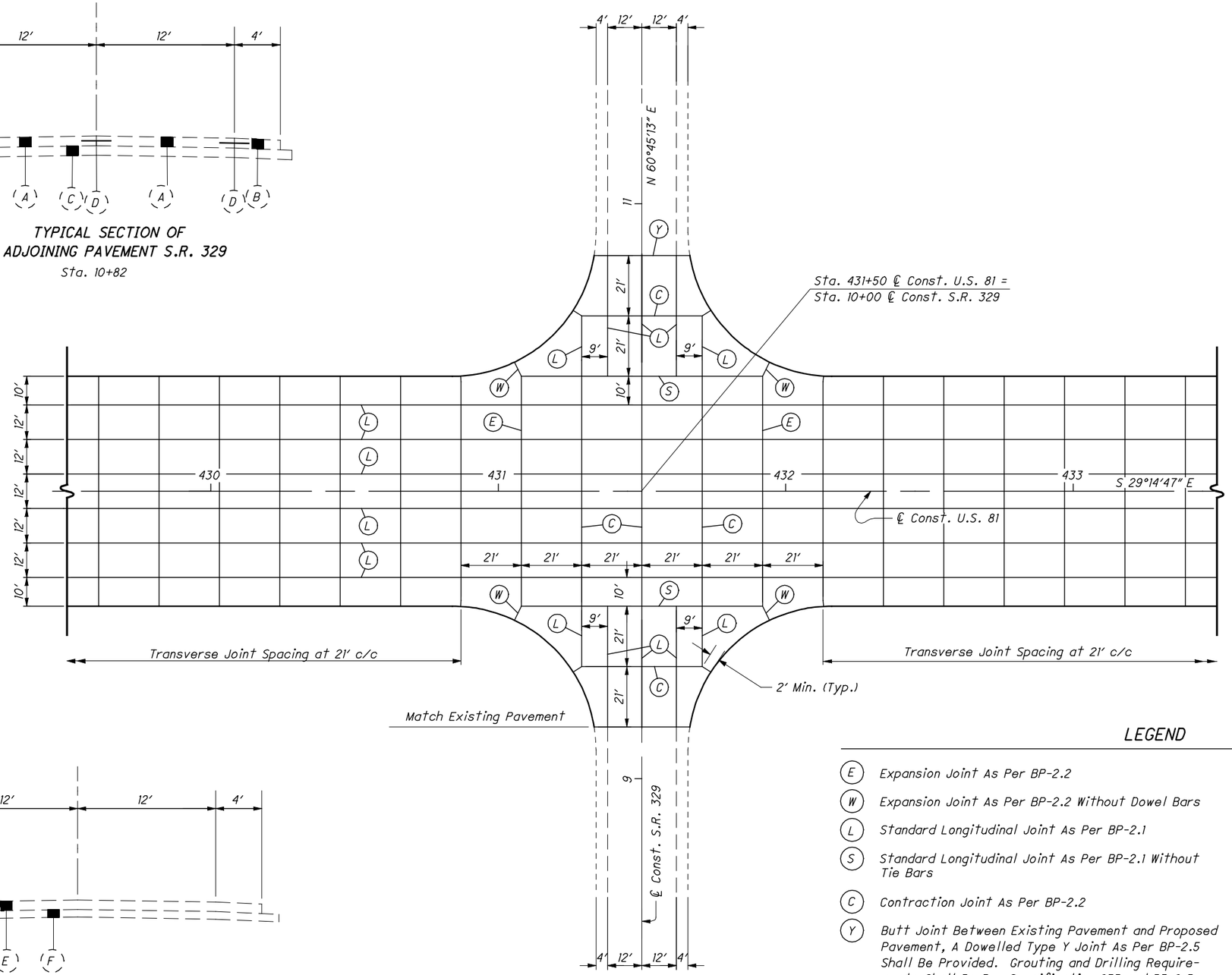

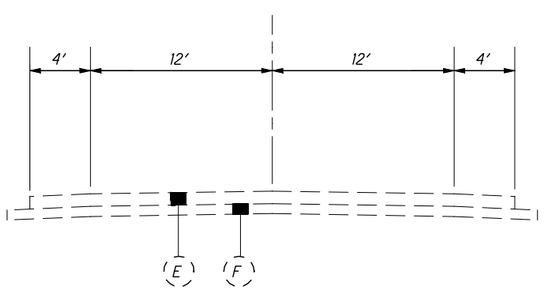

TYPICAL SECTION OF
ADJOINING PAVEMENT S.R. 329

Sta. 9+18

LEGEND

- (E) Expansion Joint As Per BP-2.2
- (W) Expansion Joint As Per BP-2.2 Without Dowel Bars
- (L) Standard Longitudinal Joint As Per BP-2.1
- (S) Standard Longitudinal Joint As Per BP-2.1 Without Tie Bars
- (C) Contraction Joint As Per BP-2.2
- (Y) Butt Joint Between Existing Pavement and Proposed Pavement, A Dowelled Type Y Joint As Per BP-2.5 Shall Be Provided. Grouting and Drilling Requirements Shall Be Per Specification 255 and BP-2.5 Except The Requirement That The Drilling Device Shall Be Capable Of Drilling Three Holes At One Time Shall Be Waived.
- (A) 10" Reinforced Concrete Pavement
- (B) 10" Non-Reinforced Concrete Pavement
- (C) 10" Granular Subbase
- (D) Tied Longitudinal Joint
- (E) Asphalt Concrete Pavement, Depth Unknown
- (F) Aggregate Base, Depth Unknown

HORIZONTAL SCALE IN FEET
0 10 20 40

CALCULATED VHW
CHECKED TLH

PAVEMENT JOINT DETAIL
U.S.R. 81 AND S.R. 329

HOC-81-18.58

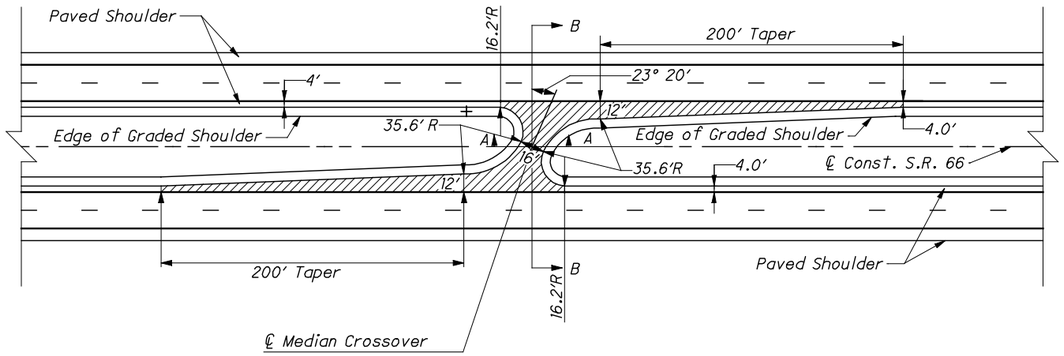

MEDIAN CROSSOVER PAVEMENT

TYPICAL MEDIAN CROSSOVER DETAIL

Applies: Sta. 5+00 and Sta. 124+00

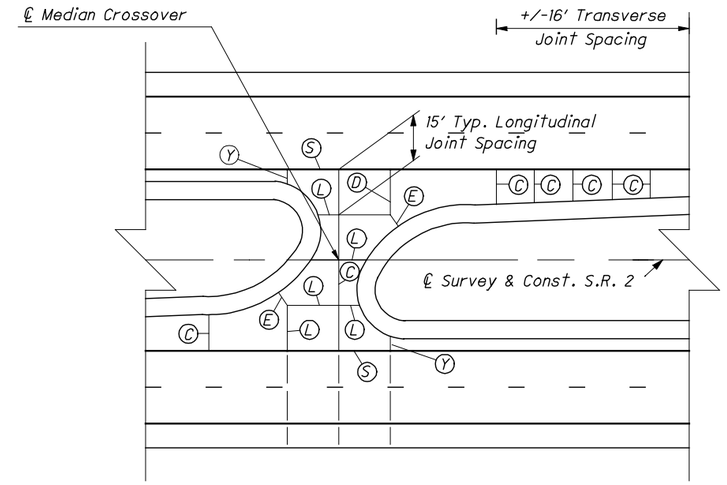

MEDIAN CROSSOVER JOINT DETAIL

*Align Transverse Joints in Median Crossover and Proposed Pavement.

Note: The Above is A Suggested Joint Diagram. The Contractor May Submit an Alternate Joint Diagram to the Engineer for Approval.

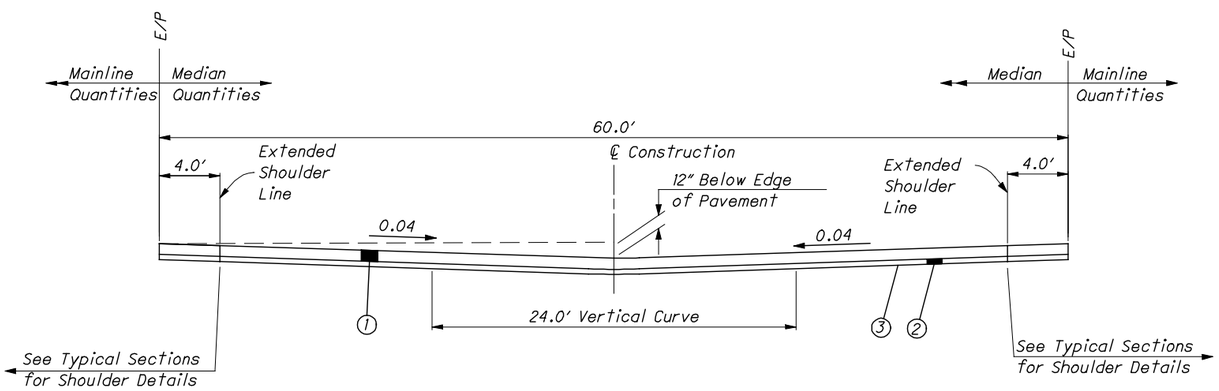

Section B-B

LEGEND

1. ITEM 452 - 9" Non-Reinforced Concrete Pavement, As Per Plan
2. ITEM 304 - 6" Aggregate Base
3. ITEM 204 - Subgrade Compaction
4. ITEM 659 - Seeding And Mulching

- (C) Contraction Joint As Per BP-2.2
- (D) Transverse Joint (With Dowels), As Per BP-2.2
- (E) Expansion Joint (Without Dowels), As Per BP-2.2
- (S) Standard Longitudinal Joint, As Per BP-2.1 without Tie Bar 3
- (L) Longitudinal Joint, As Per BP-2.1
- (Y) Contraction Joint (Type Y) As Per BP-2.5

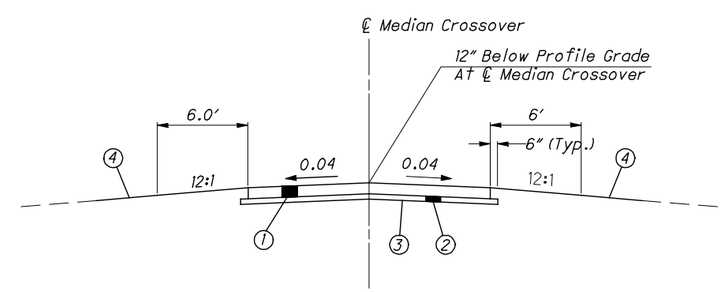

Section A-A

MEDIAN CROSSOVER DETAILS

OTT-66-4.33

CALCULATED DMK
CHECKED CML

PROPOSED LEGEND

1. ITEM 254 Pavement Planing, Asphalt Concrete (Depth As Shown)
2. ITEM 407 Tack Coat (Applied at a rate of 0.075 gal/yd²)
3. ITEM 407 Tack Coat for Intermediate Course (Applied at a rate of 0.075 gal/yd)
4. ITEM 446 1 1/4" Asphalt Concrete Surface Course, Type 1, PG64-22
5. ITEM 446 1 3/4" Asphalt Concrete Intermediate Course, Type 1, PG64-22
6. ITEM 446 Var. Thickness Asphalt Concrete Surface Course, Type 1, PG64-22
7. ITEM 446 Var. Thickness Asphalt Concrete Intermediate Course, Type 1, PG64-22
8. ITEM 848 1 3/4" Superplasticized Dense Concrete Overlay

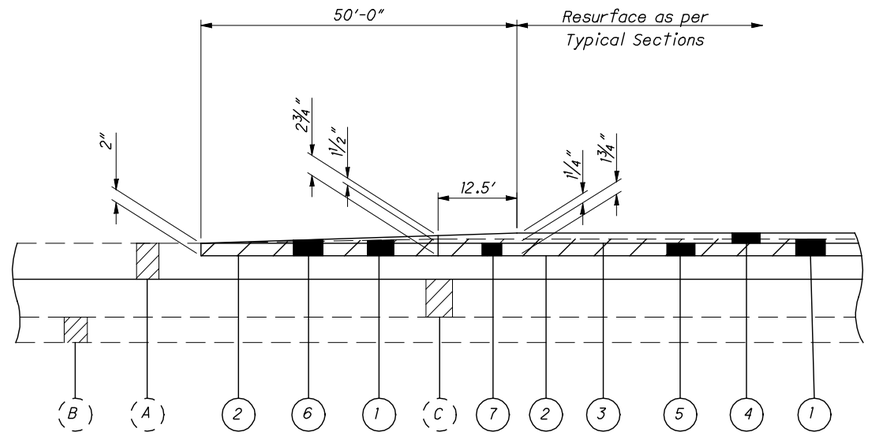

PAVEMENT TRANSITION AT BEGIN/END PAVEMENT

EXISTING LEGEND

- (A) ±6 1/2" Asphalt Concrete
- (B) ±6" Subbase
- (C) ±9" Reinforced Portland Cement Concrete Pavement

= Item 254 Pavement Planing, Asphalt Concrete

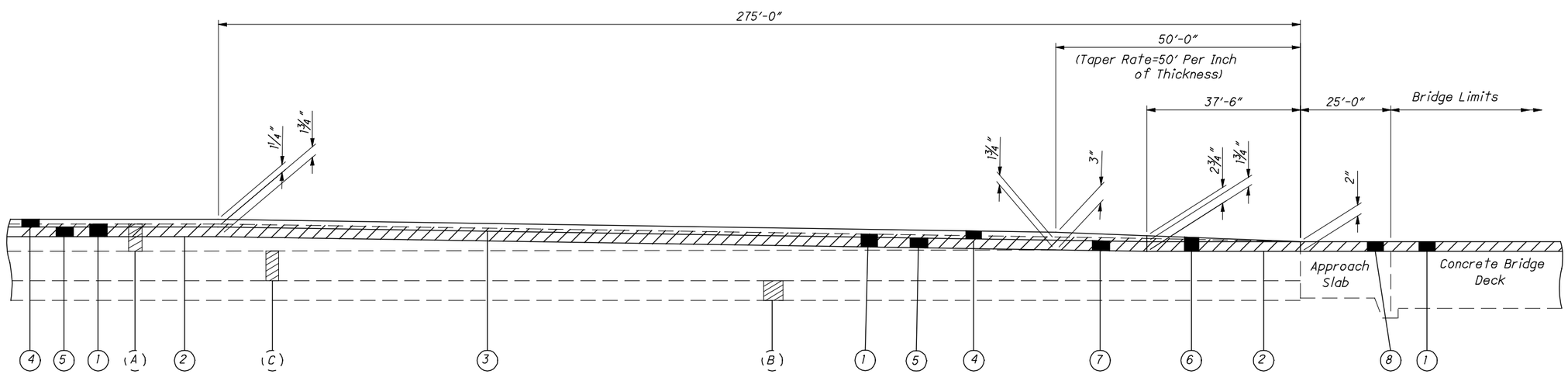

TRANSITION AT STRUCTURES

DETAIL APPLIES AT:
VAN-277-0585 Lt. & Rt. (North & South End)
VAN-277-1041 Lt. & Rt. (South Only)
VAN-277-1246 Lt. & Rt. (North Only)

PAVEMENT TRANSITION DETAILS

VAN-277-6.66

I:\pr\V3Stds\SamplePlans\Future Revision\1311\1311_9.dgn 03-OCT-2006 9:29AM mwawszki

CALCULATED DMK
CHECKED CML

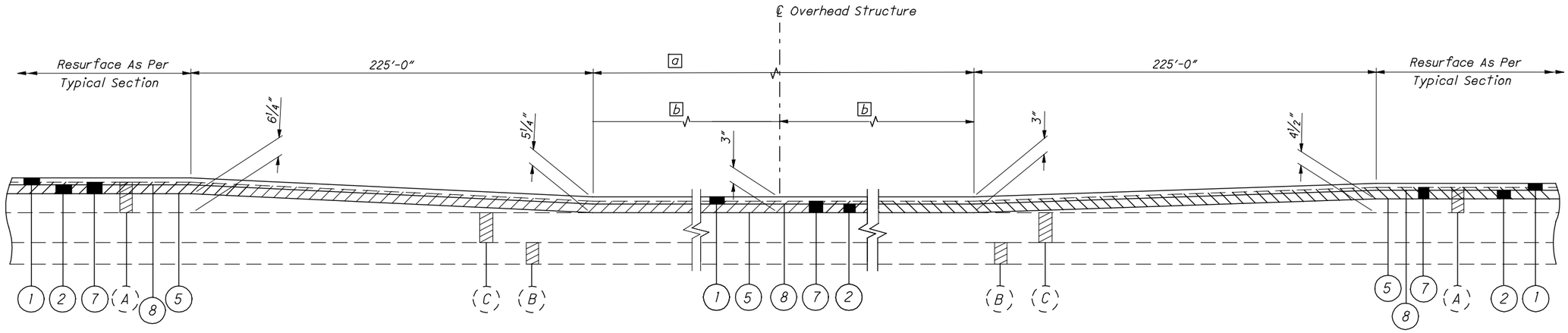

PAVEMENT TRANSITION AT OVERHEAD BRIDGE

DETAIL APPLIES AT STRUCTURES:

VAN-277-0378
VAN-277-1234
VAN-277-1303
VAN-277-0633
VAN-277-0776
VAN-277-0911
VAN-277-0493

STRUCTURE	a	b
VAN-277-0378	144.0'	72.0'
VAN-277-0493	160.0'	80.0'
VAN-277-0633	166.0'	83.0'
VAN-277-0776	165.0'	82.5'
VAN-277-0911	179.0'	89.5'
VAN-277-1234	155.0'	77.5'
VAN-277-1383	156.0'	78.0'

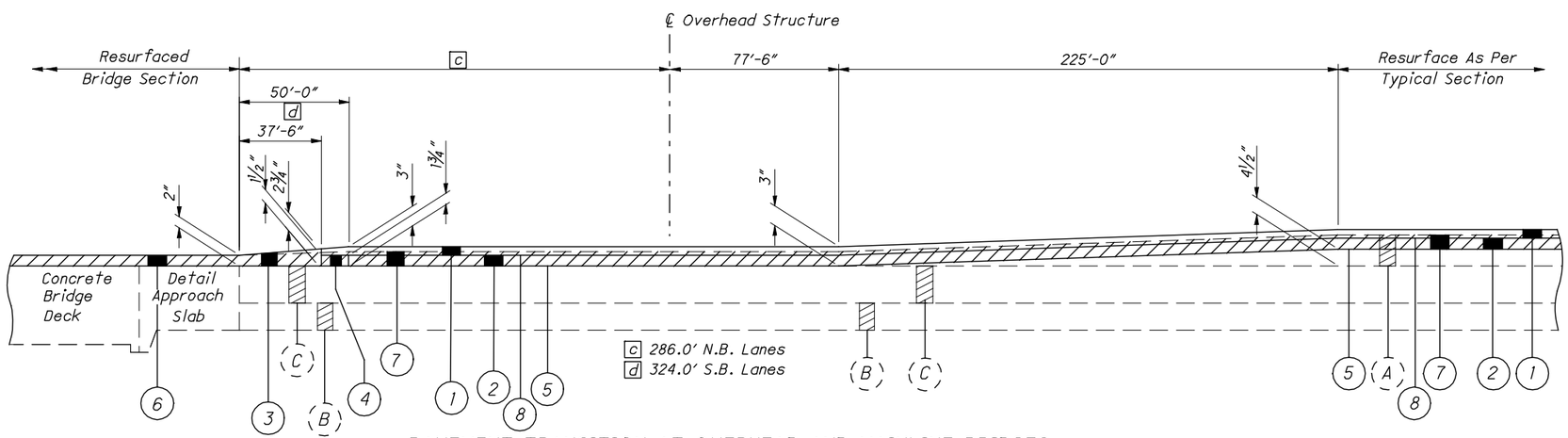

PAVEMENT TRANSITION AT OVERHEAD AND MAINLINE BRIDGES

DETAIL APPLIES AT STRUCTURES:

VAN-277-1047
VAN-277-1041 (North Side Only)

PROPOSED LEGEND

1. ITEM 446 1 ¼" Asphalt Concrete Surface Course, Type 1, PG 64-22
2. ITEM 446 1 ¾" Asphalt Concrete Intermediate Course, Type 2, PG 64-22
3. ITEM 446 Var. Thickness Asphalt Concrete Surface Course, Type 2, PG 64-22
4. ITEM 446 Var. Thickness Asphalt Concrete Intermediate Course, Type 2, PG 64-22
5. ITEM 407 Tack Coat (Applied at a rate of 0.075 gal/yd²)
6. ITEM 848 Micro Silica Modified Concrete (Thickness 1 ¼" Nominal)
7. ITEM 254 Pavement Planing, Asphalt Concrete (Depth = 2")
8. ITEM 407 Tack Coat for Intermediate Course (Applied at a rate of 0.075 gal/yd)

EXISTING LEGEND

(A) ±6 ½" Asphalt Concrete

(B) ±6" Subbase

(C) ±9" Reinforced Portland Cement Concrete Pavement

= ITEM 254 Pavement Planing, Asphalt Concrete

PAVEMENT TRANSITION DETAILS

VAN-277-6.66

I:\pr\V3Stds\SamplePlans\Future Revision\1311\1311_10.dgn 03-OCT-2006 9:29AM mwawszki

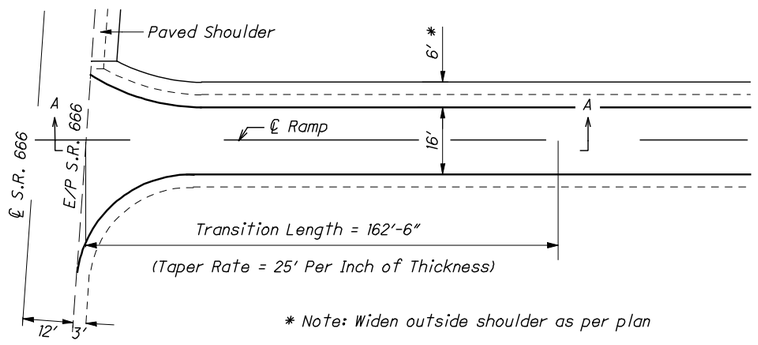

PLAN VIEW

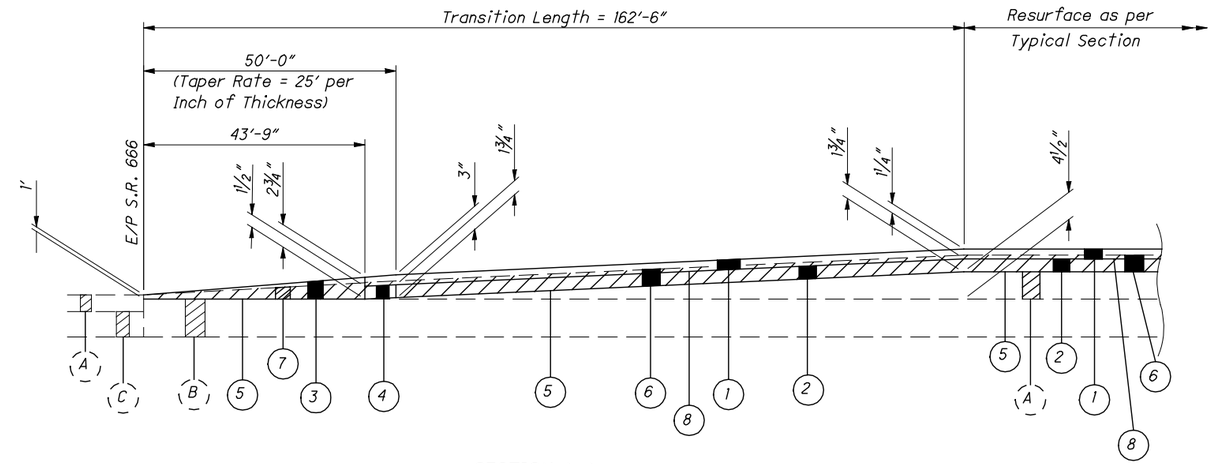

SECTION A-A

TRANSITION AT RAMP/CROSSROAD INTERSECTION

DETAIL APPLIES AT:

S.R. 666 Interchange

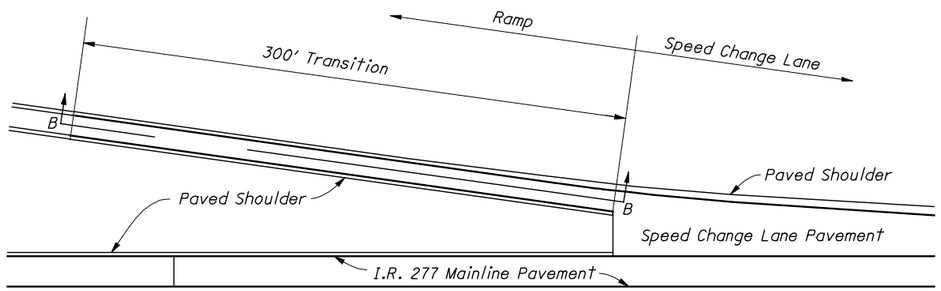

PLAN VIEW

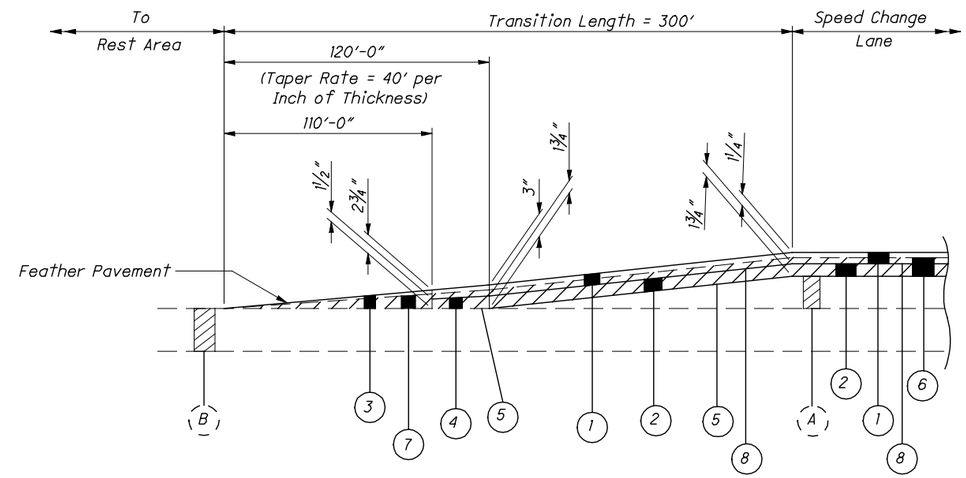

SECTION B-B

TRANSITION AT REST AREA ENTRANCE/EXIT RAMP DETAIL

PROPOSED LEGEND

1. ITEM 446 1 ¼" Asphalt Concrete Surface Course, Type 1, PG 64-22
2. ITEM 446 1 ¾" Asphalt Concrete Intermediate Course, Type 2, PG 64-22
3. ITEM 446 Var. Thickness Asphalt Concrete Surface Course, Type 1, PG 64-22
4. ITEM 446 Var. Thickness Asphalt Concrete Intermediate Course, Type 2, PG 64-22
5. ITEM 407 Tack Coat (Applied at a rate of 0.075 gal/yd²)
6. ITEM 254 Pavement Planing, Asphalt Concrete (Depth = 2")
7. ITEM 254 Pavement Planing, Asphalt Concrete (Var. Thickness)
8. ITEM 407 Tack Coat for Intermediate Course (Applied at a rate of 0.075 gal/yd²)

ITEM 254 Pavement Planing, Asphalt Concrete

EXISTING LEGEND

(A) ±6½" Asphalt Concrete

(B) ±9" Reinforced Portland Cement Concrete Pavement

(C) ±6" Aggregate Base

PAVEMENT TRANSITION DETAILS

VAN-277-6.66

I:\pr\V3Stds\SamplePlans\Future Revision\1311\1311_11.dgn 03-OCT-2006 9:29AM mwawszki

SP 1311-12
DATE: OCTOBER 2006

CALCULATED DMK
CHECKED CML

GRADING DETAILS
I.R. 73 INTERCHANGE

HAN-73-19.11

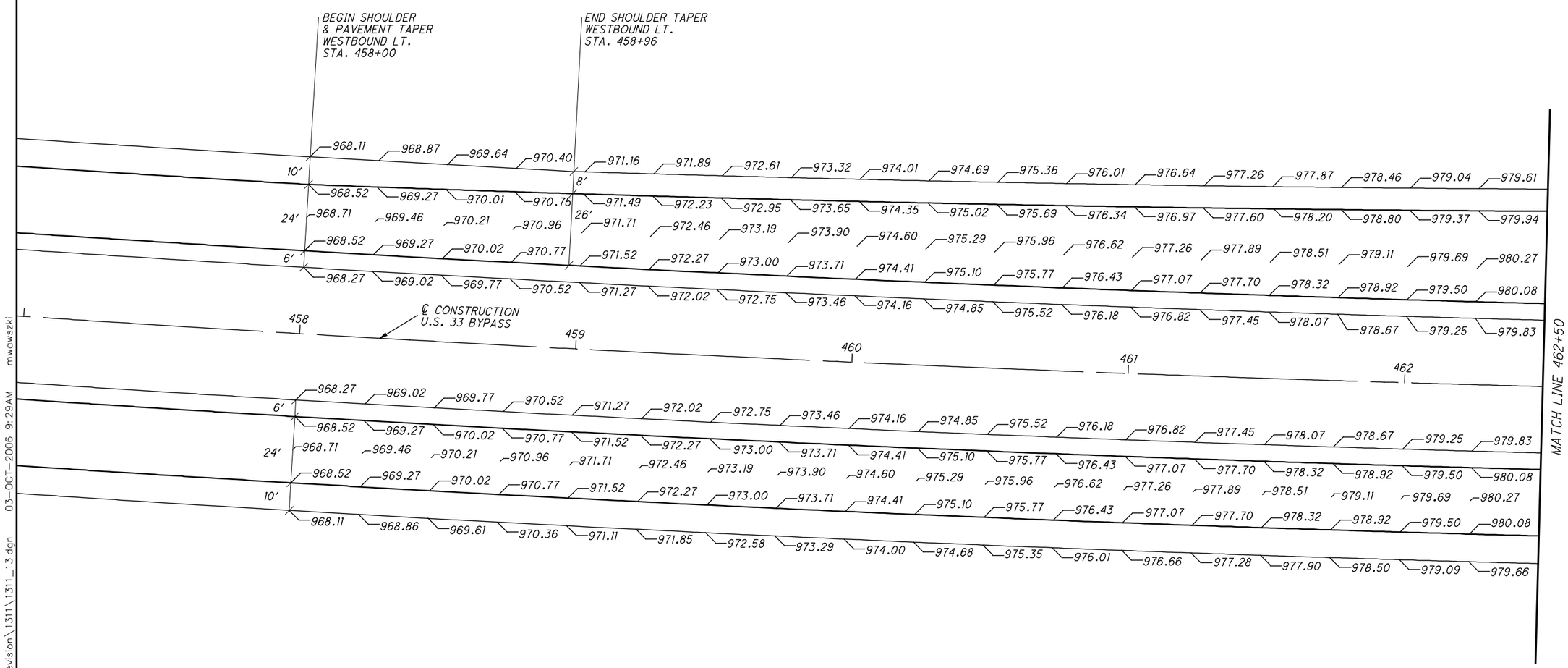

NOTE: ELEVATIONS SHOWN AT 25′ INTERVALS

HORIZONTAL SCALE IN FEET
0 10 20 40

CALCULATED CHG
CHECKED LJS

WEST RAMP TERMINAL DETAILS
STA. 457+50 TO STA. 462+50

FAI-33-13.25

I:\pr\V3Stds\SamplePlans\Future Revision\1311\1311_13.dgn 03-OCT-2006 9:29AM mwawszki

HORIZONTAL SCALE IN FEET 0 25 50 100

REF. LINE	P.I. STATION	P.I. NORTHING	P.I. EASTING	Dc	Δ	T (FT.)	L (FT.)	R (FT.)	BEGIN CURVE	END CURVE
NL	70+40.53	748634.87	1872871.53	54°03'09"	28°58'34"	27.39	53.61	106.00	70+13.14	70+66.75
NW	80+32.67	748603.36	1872689.89	32°44'26"	21°09'05"	32.67	64.60	175.00	80+00.00	80+64.60
	81+19.61	748614.67	1872776.83	57°17'45"	23°17'51"	20.62	40.66	100.00	80+98.99	81+39.65
	82+02.76	748657.43	1872848.81	76°23'40"	28°58'32"	19.38	37.93	75.00	81+83.38	82+21.31
WL	91+25.59	748615.56	1872530.06	14°19'26"	34°51'45"	125.59	243.39	400.00	90+00.00	92+43.39
	92+59.84	748577.09	1872666.79	27°48'49"	09°07'57"	16.45	32.83	206.00	92+43.39	92+76.22

REF. LINE	P.I. STATION	P.I. NORTHING	P.I. EASTING	Dc	Δ	T (FT.)	L (FT.)	R (FT.)	BEGIN CURVE	END CURVE
EL	40+56.33	748441.10	1872927.68	62°57'45"	59°58'13"	52.51	95.25	91.00	40+03.82	40+99.07
NE	50+43.68	748466.75	1872951.54	71°37'11"	57°16'00"	43.68	79.96	80.00	50+00.00	50+79.96
	51+29.09	748547.62	1872906.01	163°42'08"	27°30'05"	8.56	16.80	35.00	51+20.52	51+37.32
	51+94.09	748612.92	1872903.87	38°11'50"	32°11'22"	43.28	84.27	150.00	51+50.81	52+35.08
NR	60+58.05	748650.93	1872890.18	31°39'18"	10°58'01"	17.38	34.64	181.00	60+40.68	60+75.32

✳ CENTER OF ROUNDABOUT		
STA. 446+23.93 ℄ CONST. MORSE RD.= STA. 1406+63.08 ℄ CONST. U.S.R. 62		
NORTHING= 748520.58		
EASTING= 1872809.34		
RADIUS= 97.50'	NORTHING	EASTING
Ⓐ 130+84.85 CC = 30+00.00 ER	748447.66	1872874.06
Ⓑ 131+37.64 CC = 40+00.00 EL	748491.44	1872902.39
Ⓒ 132+53.70 CC = 60+00.00 NR	748596.15	1872870.95
Ⓓ 132+92.67 CC = 70+00.00 NL	748614.17	1872836.68
Ⓔ 134+19.05 CC = 93+19.85 WL	748572.28	1872726.68
Ⓕ 134+66.86 CC = 103+15.26 WR	748527.25	1872712.07
Ⓖ 135+73.38 CC = 121+74.46 SL	748437.30	1872758.65
Ⓗ 136+11.23 CC = 11+83.64 SR	748424.30	1872793.95

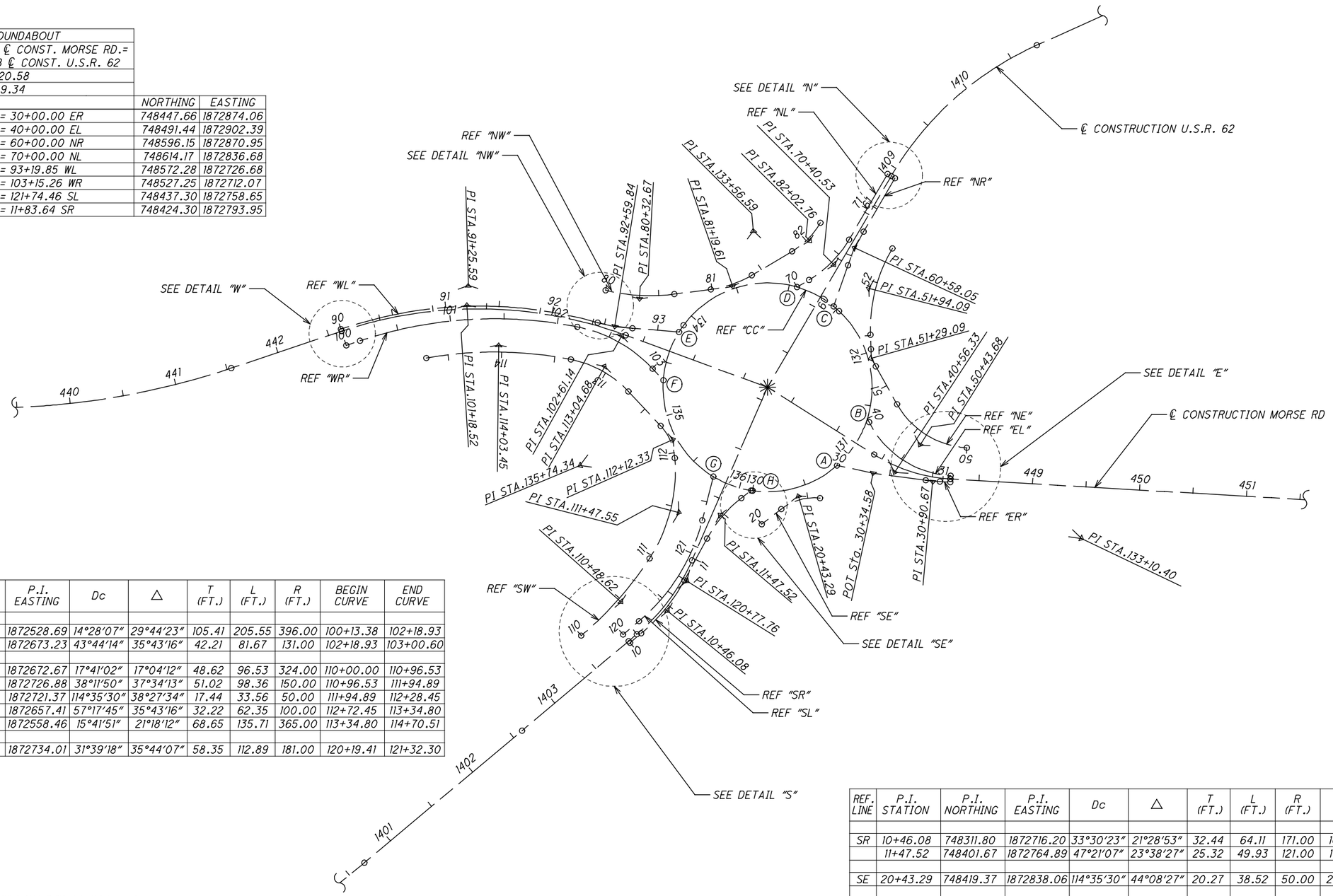

REF. LINE	P.I. STATION	P.I. NORTHING	P.I. EASTING	Dc	Δ	T (FT.)	L (FT.)	R (FT.)	BEGIN CURVE	END CURVE
WR	101+18.52	748597.44	1872528.69	14°28'07"	29°44'23"	105.41	205.55	396.00	100+13.38	102+18.93
	102+61.14	748568.80	1872673.23	43°44'14"	35°43'16"	42.21	81.67	131.00	102+18.93	103+00.60
SW	110+48.62	748320.06	1872672.67	17°41'02"	17°04'12"	48.62	96.53	324.00	110+00.00	110+96.53
	111+47.55	748403.67	1872726.88	38°11'50"	37°34'13"	51.02	98.36	150.00	110+96.53	111+94.89
	112+12.33	748471.91	1872721.37	114°35'30"	38°27'34"	17.44	33.56	50.00	111+94.89	112+28.45
	113+04.68	748540.34	1872657.41	57°17'45"	35°43'16"	32.22	62.35	100.00	112+72.45	113+34.80
	114+03.45	748559.94	1872558.46	15°41'51"	21°18'12"	68.65	135.71	365.00	113+34.80	114+70.51
SL	120+77.76	748339.85	1872734.01	31°39'18"	35°44'07"	58.35	112.89	181.00	120+19.41	121+32.30

REF. LINE	P.I. STATION	P.I. NORTHING	P.I. EASTING	Dc	Δ	T (FT.)	L (FT.)	R (FT.)	BEGIN CURVE	END CURVE
SR	10+46.08	748311.80	1872716.20	33°30'23"	21°28'53"	32.44	64.11	171.00	10+13.64	10+77.75
	11+47.52	748401.67	1872764.89	47°21'07"	23°38'27"	25.32	49.93	121.00	11+22.20	11+72.12
SE	20+43.29	748419.37	1872838.06	114°35'30"	44°08'27"	20.27	38.52	50.00	20+23.01	20+61.53
ER	30+90.67	748433.00	1872963.47	32°00'32"	04°13'17"	6.60	13.19	179.00	30+84.08	30+97.26

FOR DETAILS "N", "E", "S", "W", "SE" AND "NW" SEE SHEET 4
FOR U.S.R.62 AND MORSE ROAD DETAILS SEE SHEET 2

GEOMETRIC LAYOUT

ROUNDABOUT

FRA-62-26.34

I:\pr\V3Stds\SamplePlans\Future Revision\1311\1311_14a.dgn 03-OCT-2006 9:29AM mwawszki

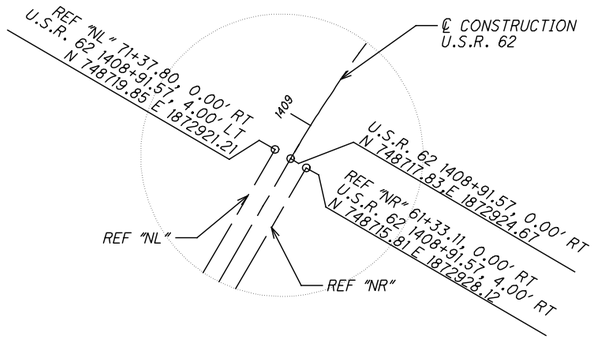

DETAIL "N"
NOT TO SCALE

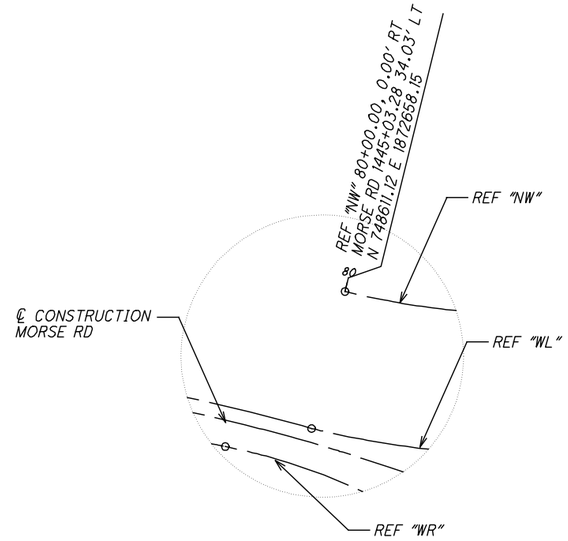

DETAIL "NW"
NOT TO SCALE

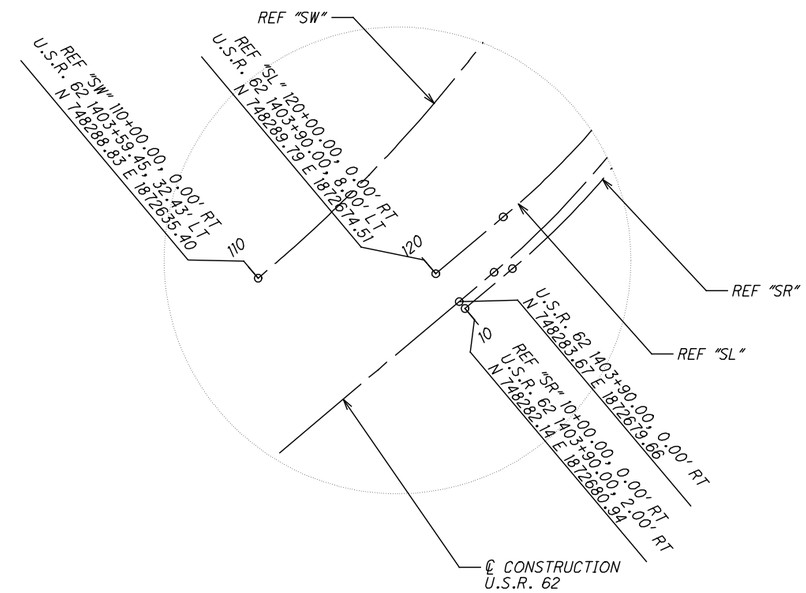

DETAIL "S"
NOT TO SCALE

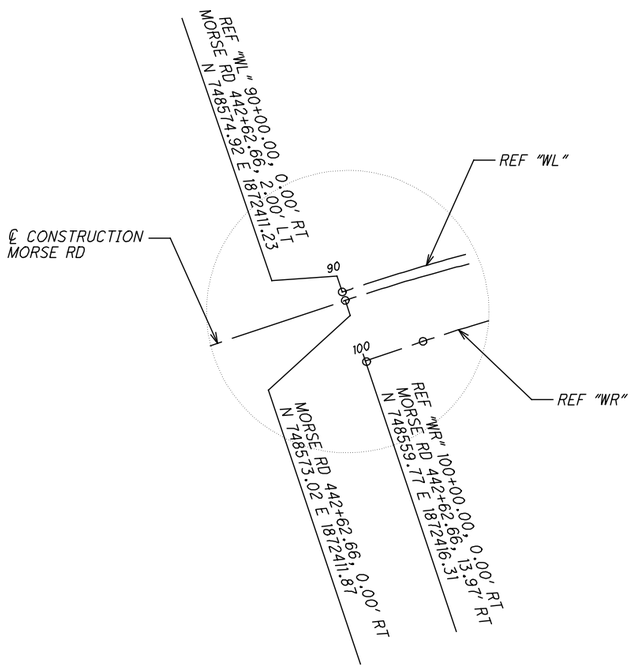

DETAIL "W"
NOT TO SCALE

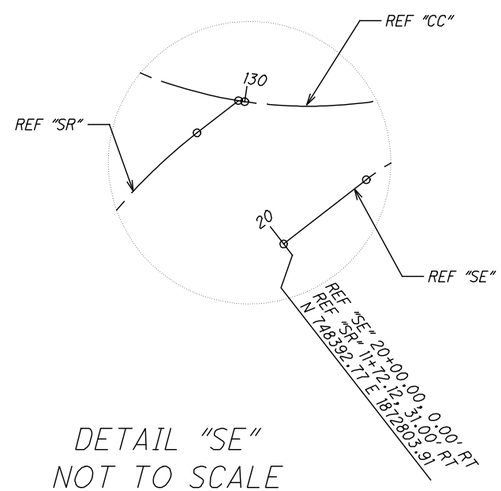

DETAIL "SE"
NOT TO SCALE

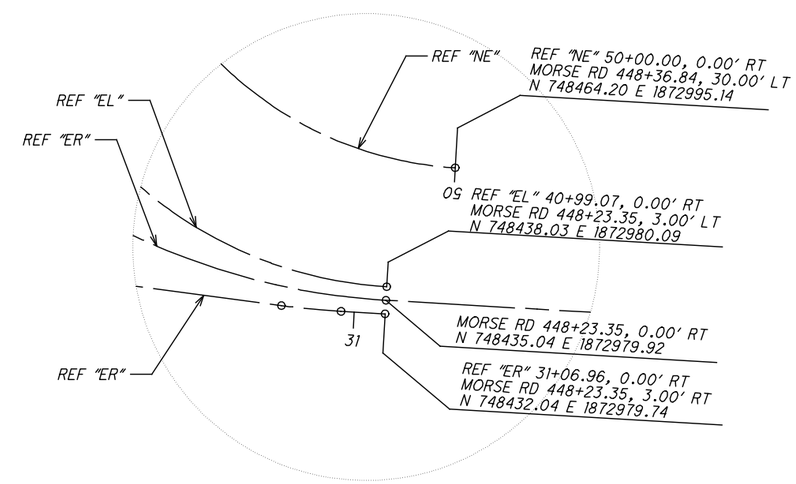

DETAIL "E"
NOT TO SCALE

ROUNDABOUT GEOMETRIC LAYOUT

FRA-62-26.34

I:\pr\V3Stds\SamplePlans\Future Revision\1311\1311_14b.dgn 03-OCT-2006 9:30AM rwawszki

SP 1312-1
DATE: OCTOBER 2006

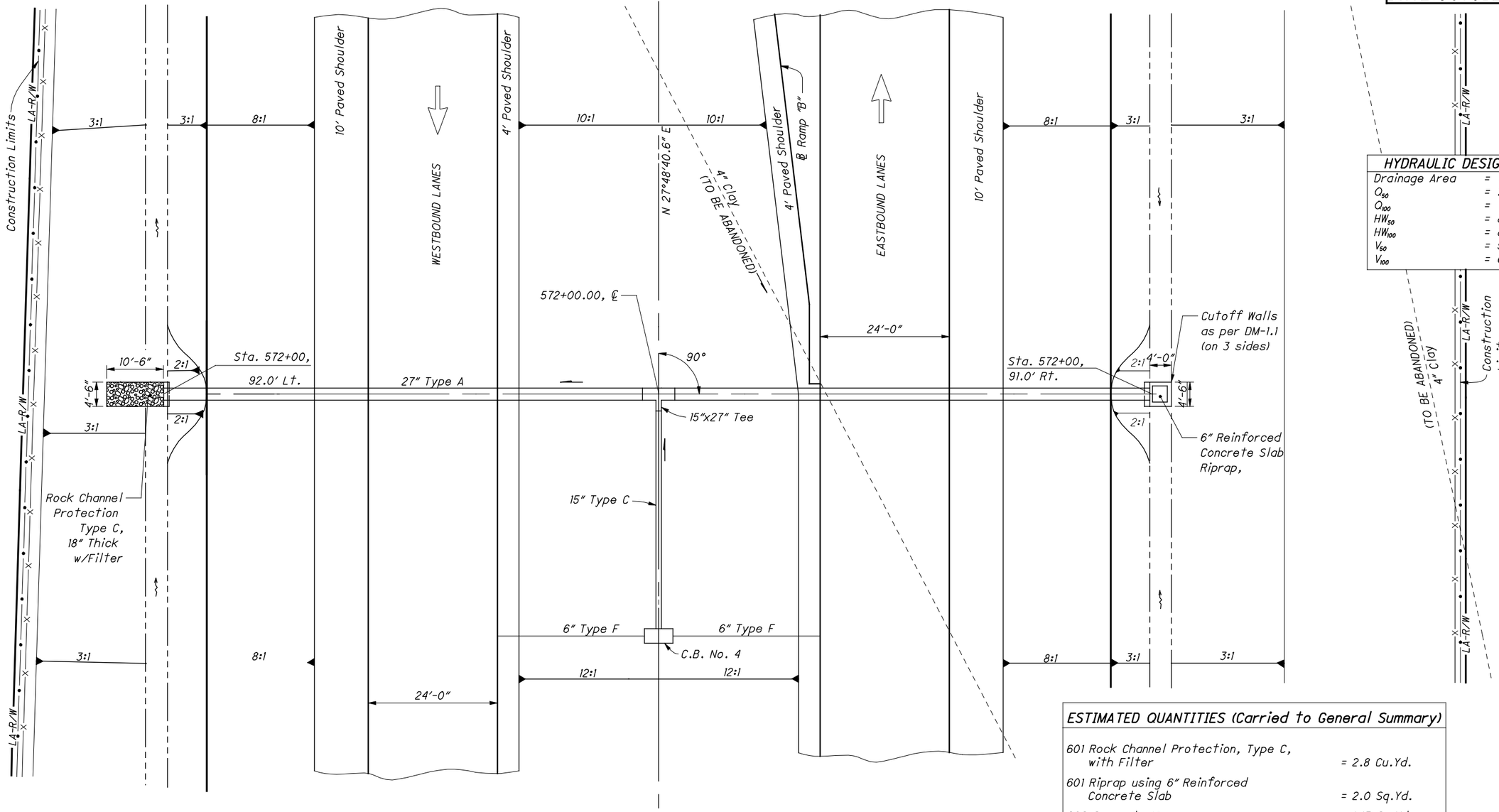

HYDRAULIC DESIGN DATA	
Drainage Area	= 28 Ac.
Q_{50}	= 22 cfs
Q_{100}	= 25 cfs
HW_{50}	= 829.7'
HW_{100}	= 830.1'
V_{50}	= 5.6 fps
V_{100}	= 6.1 fps

ESTIMATED QUANTITIES (Carried to General Summary)	
601 Rock Channel Protection, Type C, with Filter	= 2.8 Cu.Yd.
601 Riprap using 6" Reinforced Concrete Slab	= 2.0 Sq.Yd.
602 Concrete Masonry	= 1.15 Cu.Yd.
603 27" Conduit, Type A, 706.02	= 183 Ft.

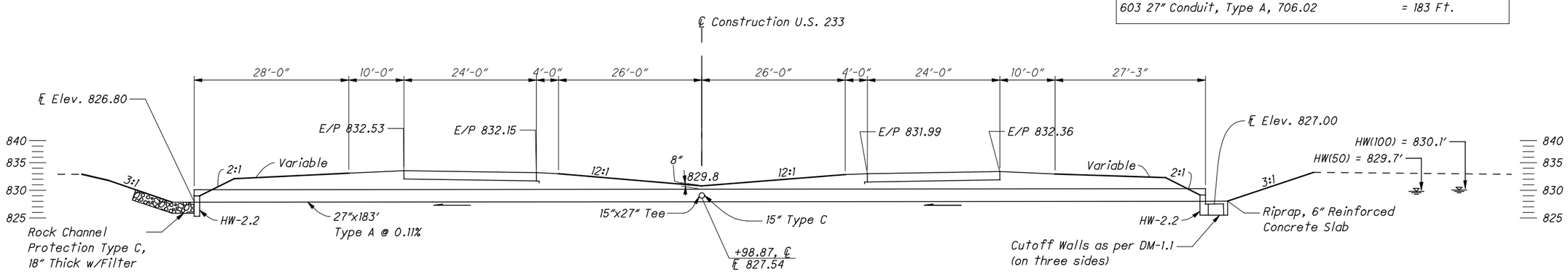

HORIZONTAL SCALE IN FEET 0 5 10 20

CALCULATED DMK
CHECKED CML

CULVERT DETAILS
U.S. 233 - STA. 572+00

ALL-233-22.69

SP 1312-2
DATE: OCTOBER 2006

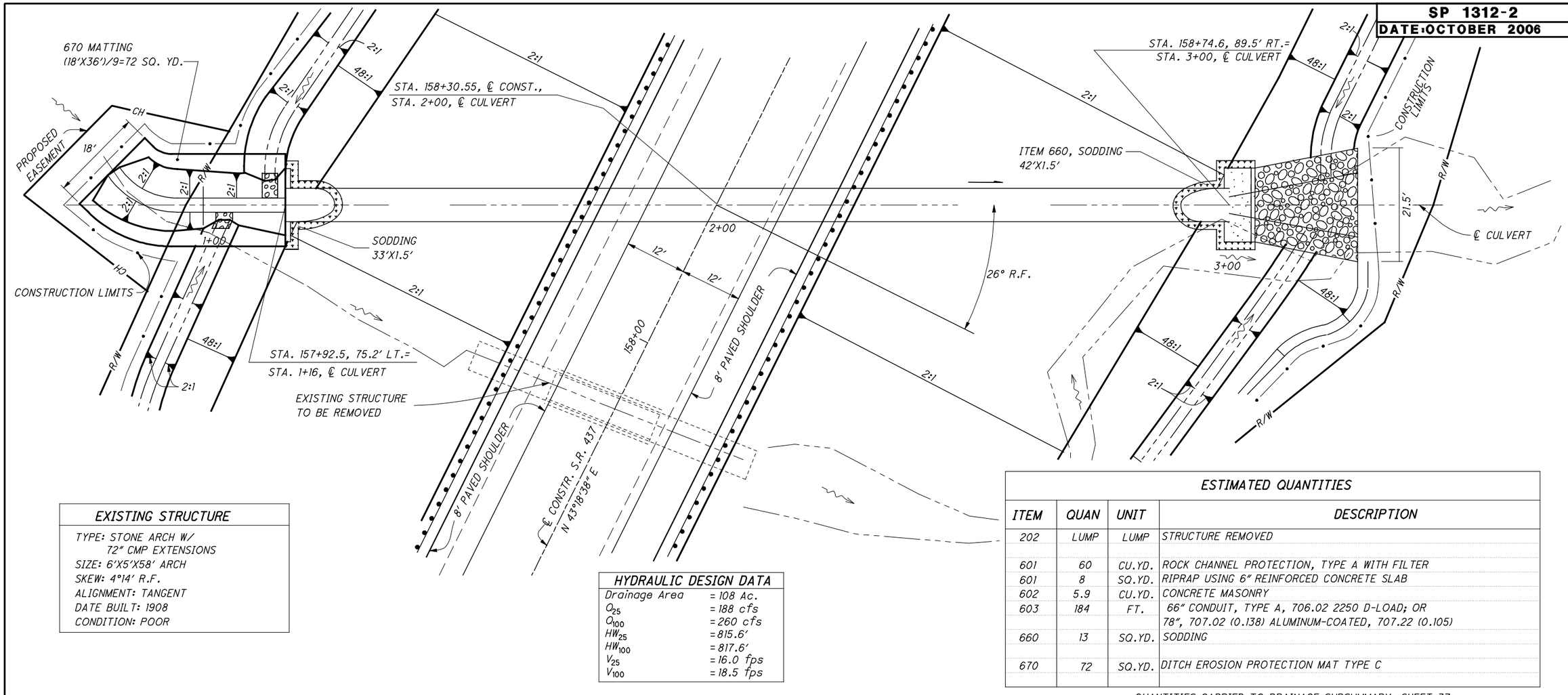

CALCULATED JOH
CHECKED JDH

EXISTING STRUCTURE

TYPE: STONE ARCH W/
72" CMP EXTENSIONS
SIZE: 6'X5'X58' ARCH
SKEW: 4°14' R.F.
ALIGNMENT: TANGENT
DATE BUILT: 1908
CONDITION: POOR

HYDRAULIC DESIGN DATA

Drainage Area	= 108 Ac.
Q_{25}	= 188 cfs
Q_{100}	= 260 cfs
HW_{25}	= 815.6'
HW_{100}	= 817.6'
V_{25}	= 16.0 fps
V_{100}	= 18.5 fps

ESTIMATED QUANTITIES

ITEM	QUAN	UNIT	DESCRIPTION
202	LUMP	LUMP	STRUCTURE REMOVED
601	60	CU.YD.	ROCK CHANNEL PROTECTION, TYPE A WITH FILTER
601	8	SQ.YD.	RIPRAP USING 6" REINFORCED CONCRETE SLAB
602	5.9	CU.YD.	CONCRETE MASONRY
603	184	FT.	66" CONDUIT, TYPE A, 706.02 2250 D-LOAD; OR 78", 707.02 (0.138) ALUMINUM-COATED, 707.22 (0.105)
660	13	SQ.YD.	SODDING
670	72	SQ.YD.	DITCH EROSION PROTECTION MAT TYPE C

QUANTITIES CARRIED TO DRAINAGE SUBSUMMARY, SHEET 37

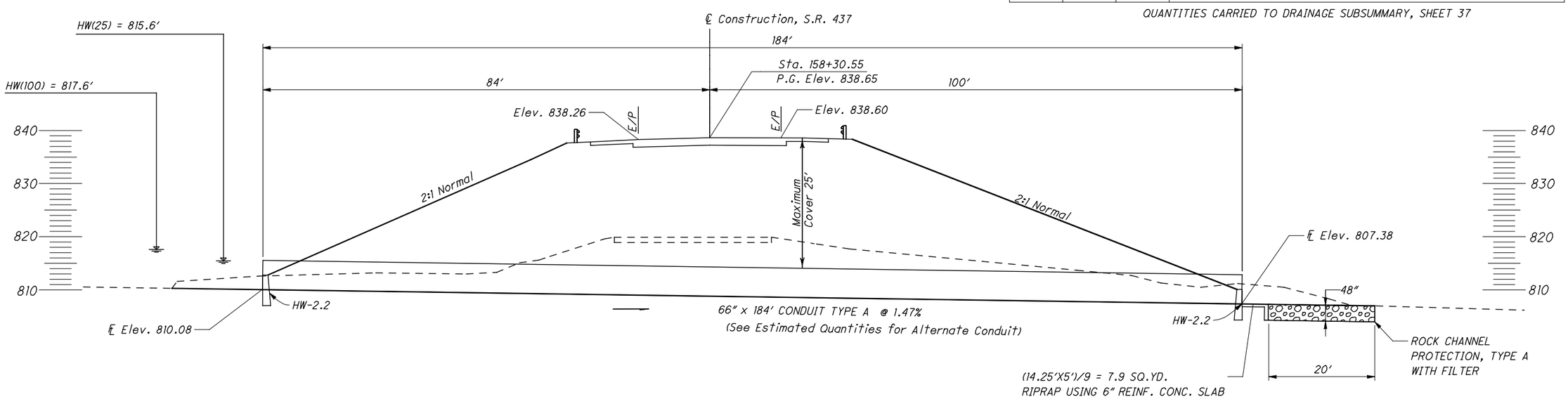

CULVERT DETAIL
S.R. 437 STA. 158+30

PRE-437-2.65

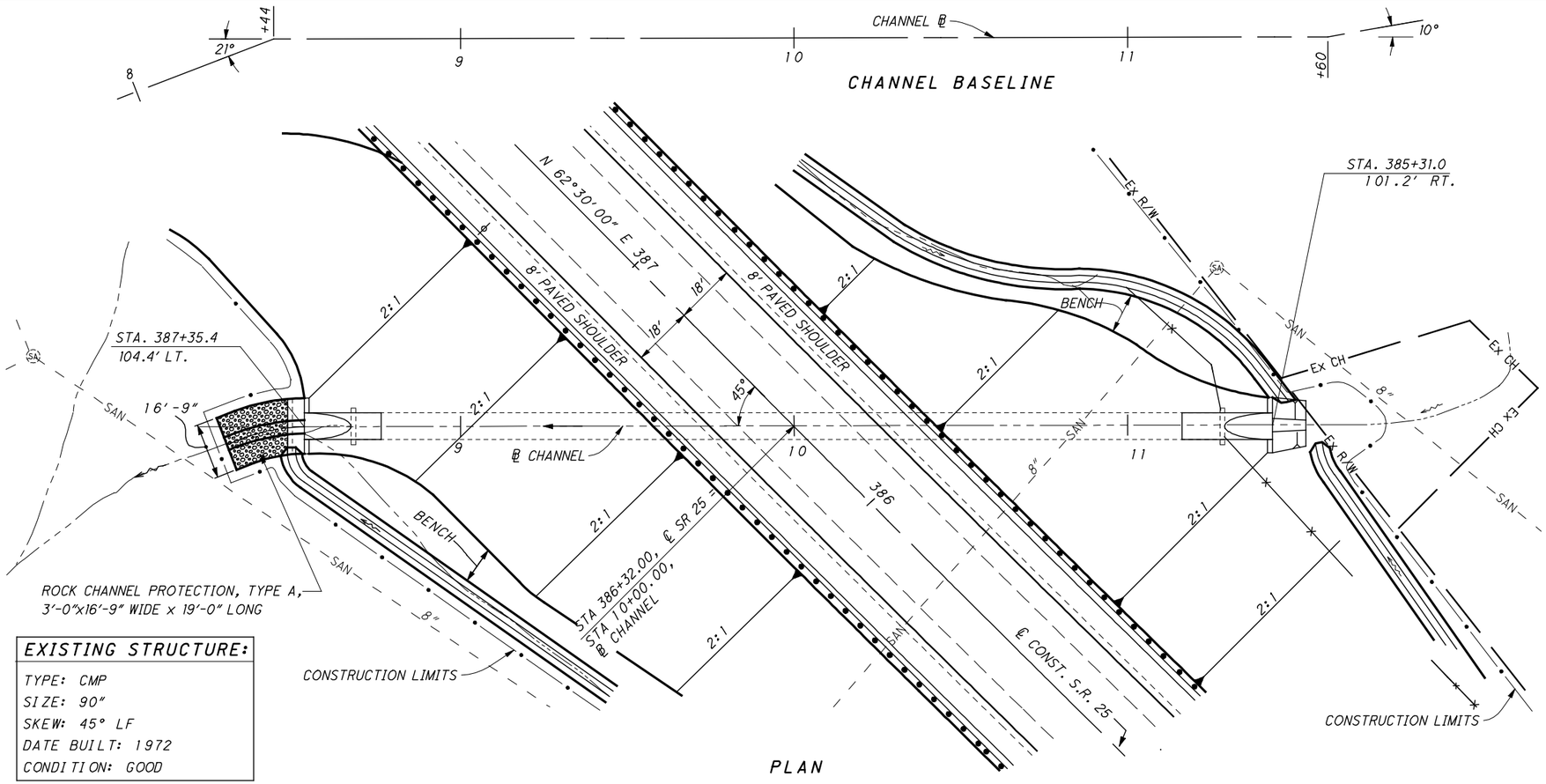

PLAN

EXISTING STRUCTURE:
TYPE: CMP
SIZE: 90"
SKEW: 45° LF
DATE BUILT: 1972
CONDITION: GOOD

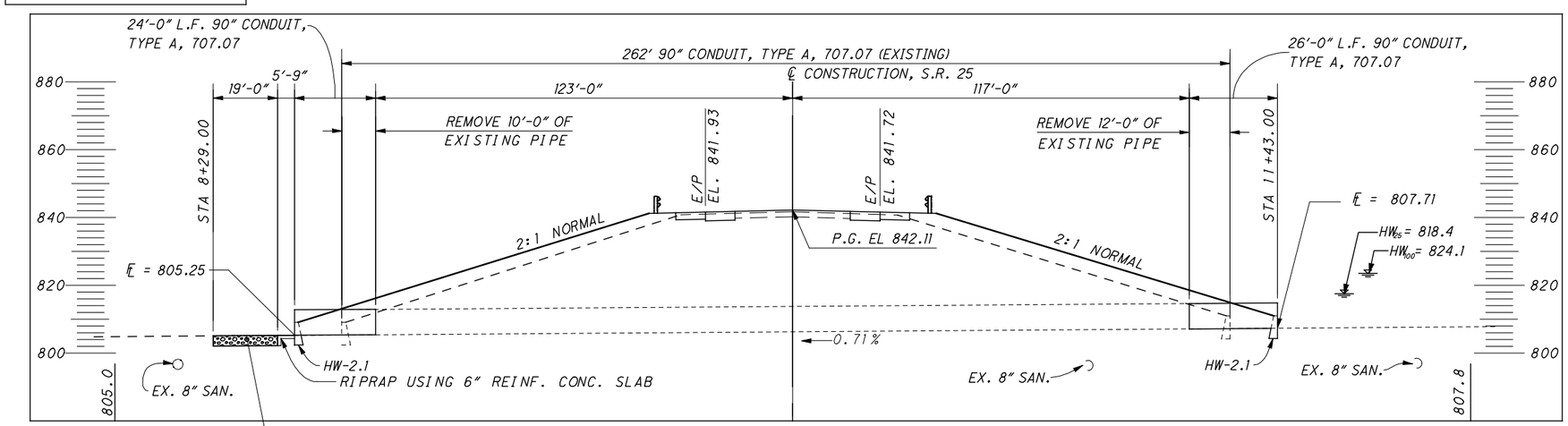

PROFILE ALONG CENTERLINE OF CHANNEL

HYDRAULIC DESIGN DATA	
Drainage Area	= 540 Ac.
Q_{25}	= 480 cfs
Q_{100}	= 640 cfs
HW_{25}	= 818.4'
HW_{100}	= 824.1'
V_{25}	= 13.5 fps
V_{100}	= 16.0 fps

ESTIMATED QUANTITIES

ITEM	QUANTITY	UNIT	DESCRIPTION
601	9.3	SQ. YD.	RIP-RAP USING 6" REINFORCED CONCRETE SLAB
601	35.4	CU. YD.	ROCK CHANNEL PROTECTION, TYPE A WITH FABRIC FILTER
602	8.0	CU. YD.	CONCRETE MASONRY
603	50	FT.	90" CONDUIT, TYPE A, 707.07
			QUANTITIES CARRIED TO SHEET NO. 38

HORIZONTAL SCALE IN FEET
0 10 20 40

CALCULATED JKP
CHECKED FGW

CULVERT DETAIL STA. 386+32

STA-25-16.86

Outlet:
Drainage Area = 4.3 acres
Q_{10} = 7.3 cfs
Q_{25} = 8.9 cfs
HGL_{10} = 1087.1
HGL_{25} =1087.9

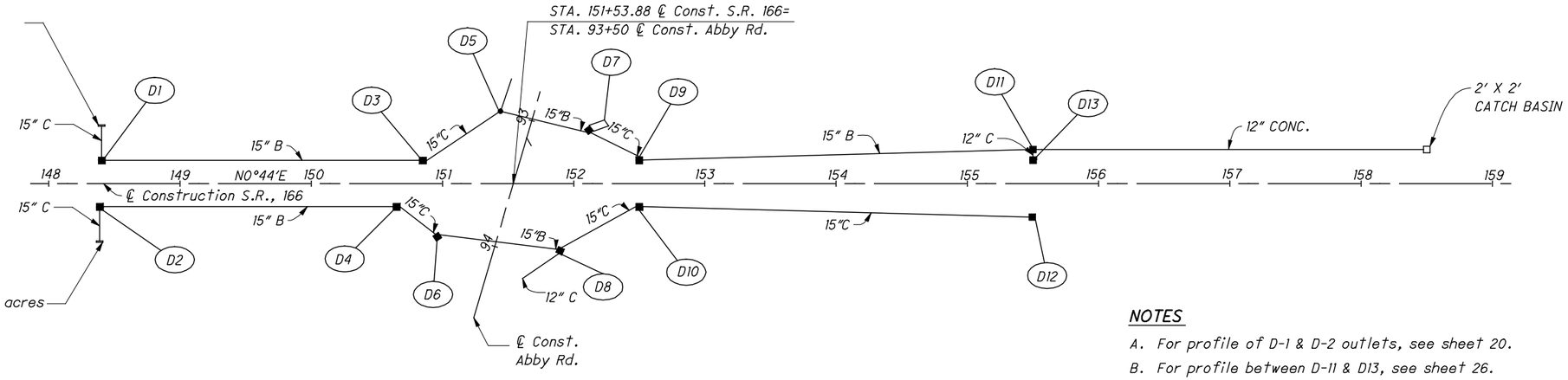

Outlet:
Drainage Area = 3.6 acres
Q_{10} = 5.8 cfs
Q_{25} = 6.7 cfs
HGL_{10} = 1086.8
HGL_{25} =1087.6

NOTES

A. For profile of D-1 & D-2 outlets, see sheet 20.
B. For profile between D-11 & D13, see sheet 26.
C. For Abby Rd. drainage profile, see sheet 41.
D. For drainage sub-summary, see sheets 14-16.
E. For S.R.166 plan & profile, see sheets 17-19.

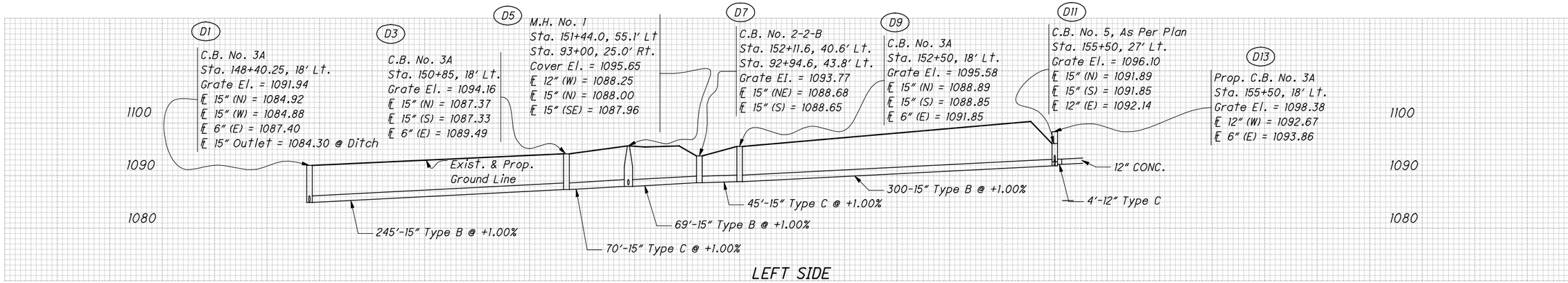

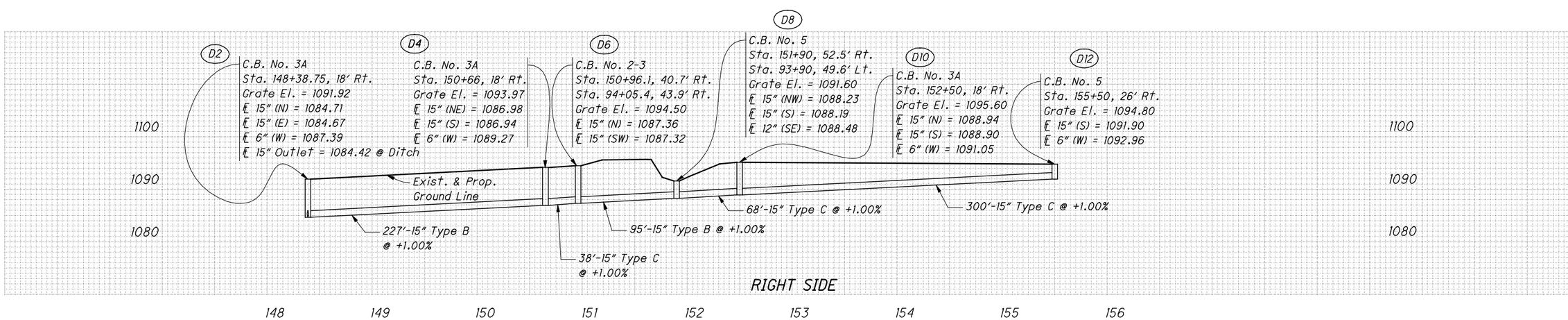

HORIZONTAL SCALE IN FEET
0 25 50 100

CALCULATED MSQ
CHECKED PDG

S.R. 166 DRAINAGE PROFILE

RIC-166-8.37

SP 1312-5	
DATE OCTOBER 2006	

CALCULATED MTG
CHECKED CJM

LONGITUDINAL SEWER PROFILE

MEDIAN SEWER PROFILE

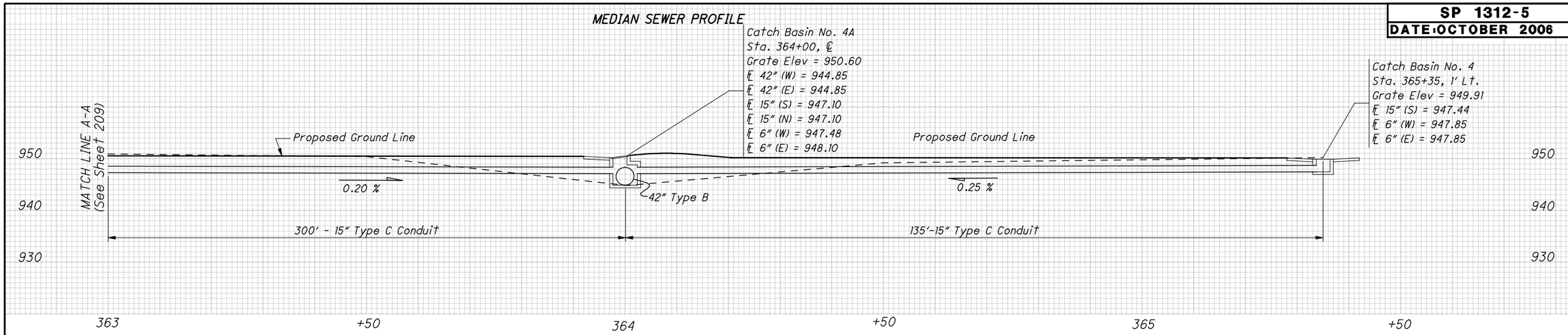

NORTHBOUND SEWER PROFILE

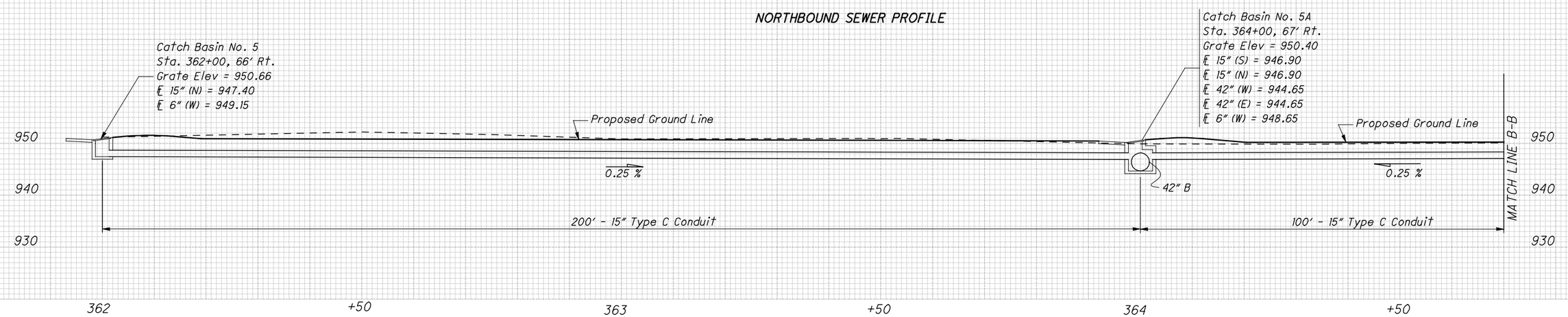

NORTHBOUND SEWER PROFILE

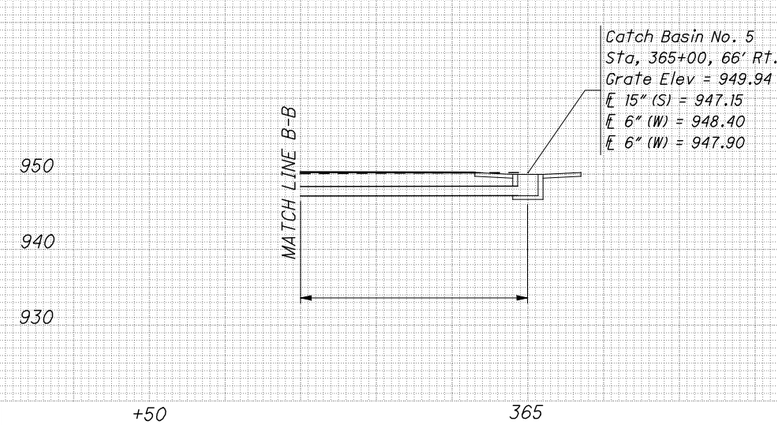

SOUTHBOUND SEWER PROFILE

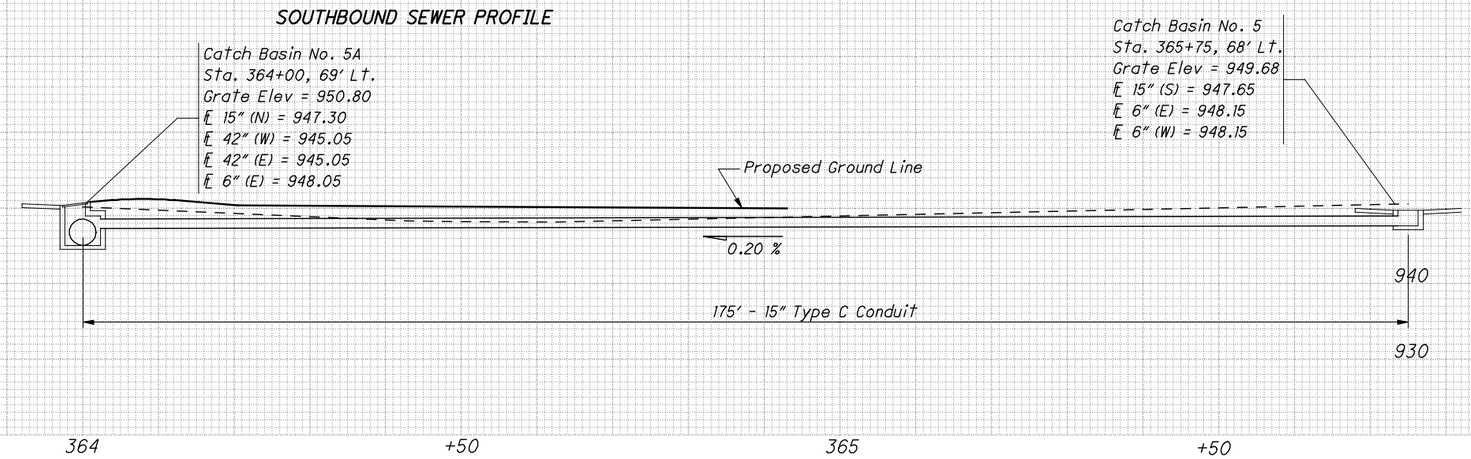

LUC-76-31.48

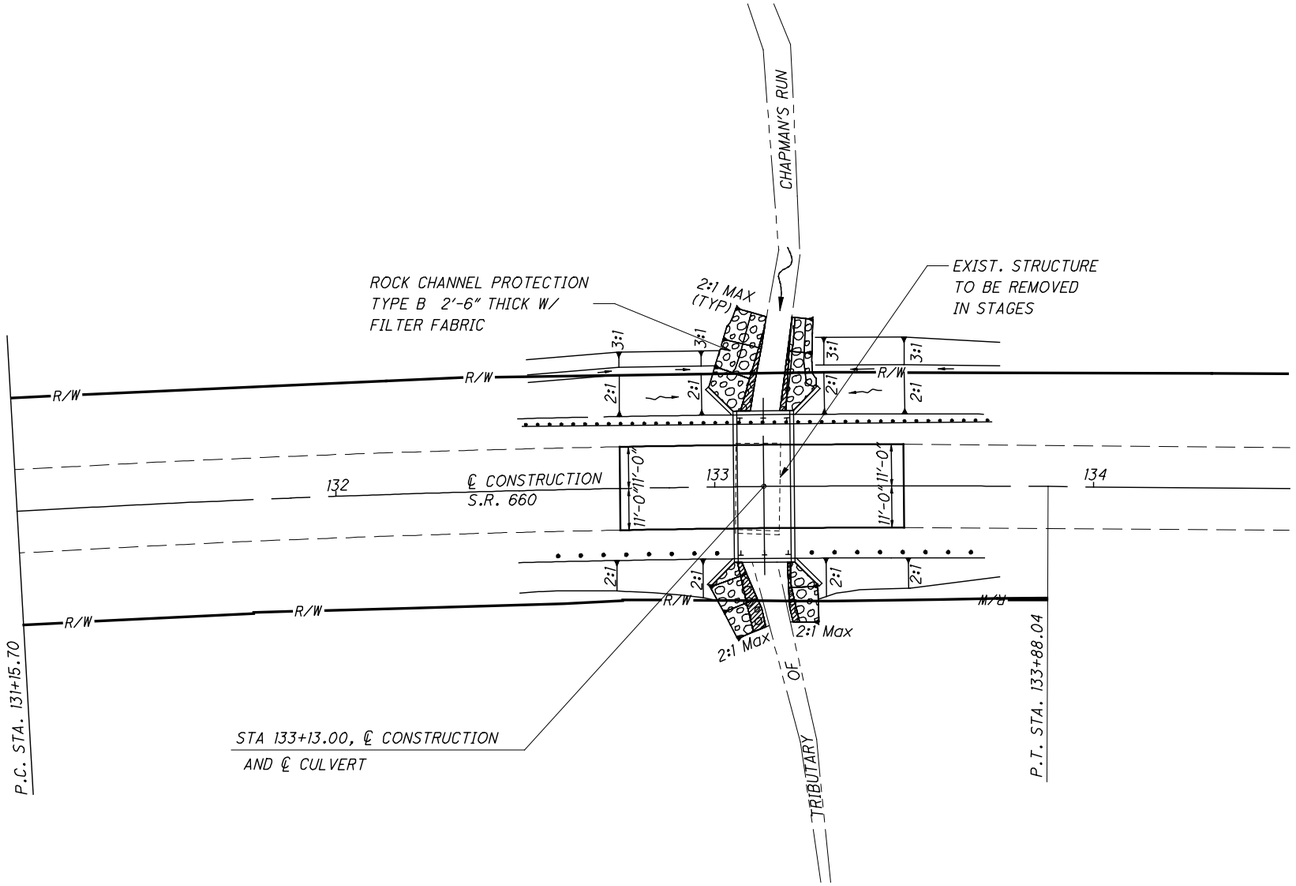

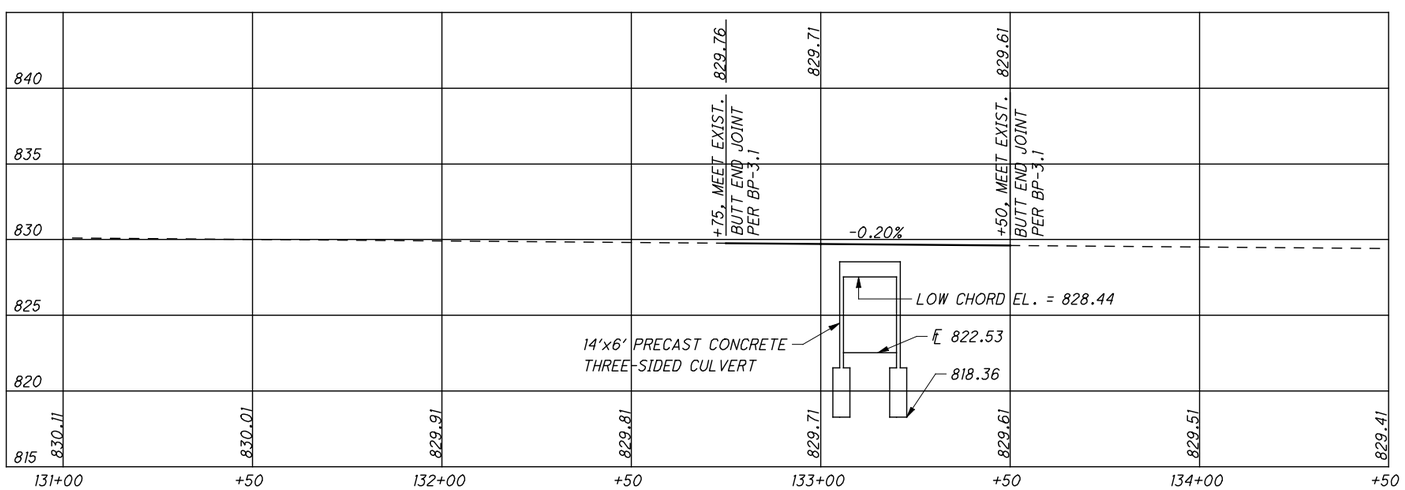

HYDRAULIC DATA

DRAINAGE AREA: 0.79 SQ.MI.
EXISTING WATERWAY OPENING: 60.0 SQ.FT.
PROPOSED WATERWAY OPENING: 70.0 SQ.FT.

Q_{10}	=	297 CFS	Q_{100}	=	518 CFS
V_{10}	=	6.9 FPS	V_{100}	=	7.9 FPS
HW_{10}	=	827.8	HW_{100}	=	829.9

EXISTING STRUCTURE

TYPE: CONCRETE SLAB ON GRAVITY WALL ABUTMENT
SPAN: 12'-0"
ROADWAY: 22'-5" F/F RAILS
ALIGNMENT: CURVE
APPROACH SLAB: NONE
SUPERELEVATION: VARIES
DATE BUILT: 1900
STRUCTURE FILE NO. 3006514
SKEW: 0° REFERENCE CHORD
CONDITION: POOR
LOADING: S-11.3(7)

PROPOSED STRUCTURE

TYPE: PRECAST REINFORCED CONCRETE FLAT-TOPPED
THREE-SIDED CULVERT
SPAN: 14'-0" F/F CULVERT
ROADWAY: 34'-0" F/F RAILS
ALIGNMENT: 1°19'11" CURVED TO THE RIGHT
SUPERELEVATION: VARIES
APPROACH SLAB: NONE
SKEW: 0°
WEARING SURFACE: ASPHALT CONCRETE
LOADING: HS-20-44 AND THE ALTERNATE MILITARY
LOADING

N

0 10 20 40
HORIZONTAL
SCALE IN FEET

CALCULATED KEW
CHECKED JOH

CULVERT PLAN AND PROFILE
STA. 133+13.00

GUE-660-2.52

CALCULATED KEW
CHECKED JOH

DESIGN SPECIFICATIONS:
THIS STRUCTURE CONFORMS TO "STANDARD SPECIFICATIONS FOR HIGHWAY BRIDGES" ADOPTED BY THE AMERICAN ASSOCIATION OF STATE HIGHWAY AND TRANSPORTATION OFFICIALS, 2002 AND THE ODOT BRIDGE DESIGN MANUAL.

DESIGN LOADING:
HS25 AND THE ALTERNATE MILITARY LOADING.

DESIGN STRESSES:
CAST-IN-PLACE STRUCTURES
CONCRETE CLASS "C" - f'c = 4,000 psi SUBSTRUCTURE
REINFORCING STEEL - ASTM A615, A616, OR A617
Fy = 60,000 psi.

PRECAST STRUCTURES: FOR THREE-SIDED STRUCTURES SEE CULVERT NOTES.
FOR BOX AND PIPE CULVERTS SEE CMS 603.

REMOVAL OF EXISTING STRUCTURE:
PORTIONS OF THE EXISTING STRUCTURE SHALL BE REMOVED AS INDICATED.

FOUNDATION BEARING PRESSURE:
WINGWALL AND CULVERT FOOTINGS, AS DESIGNED PRODUCE A MAXIMUM BEARING PRESSURE OF 1.5 TONS PER SQUARE FOOT.

THREE-SIDED CULVERT WALL AND TOP SLAB THICKNESS
THE WALL AND TOP SLAB THICKNESSES SHOWN ON THE PLANS WERE OBTAINED FROM THE MANUFACTURERS AT THE TIME THE PLANS WERE PREPARED. IF THE WALL AND/OR TOP SLAB THICKNESS OF THE CULVERT PROPOSED ARE DIFFERENT FROM WHAT IS SHOWN ON THE PLANS, A MARKED COPY OF THE PROJECT PLANS, INCLUDING ALL PLAN NOTES AND DETAILS SHOWING ALL ITEMS AFFECTED BY THE DIFFERENT CULVERT DIMENSIONS, SHALL BE SUBMITTED FOR APPROVAL WITH THE SHOP DRAWINGS. ALL WORK REQUIRED TO ACCOMMODATE ANY REVISED DIMENSIONS SHALL BE AT NO EXTRA COST TO THE STATE.

ITEM 512, TYPE 2 WATERPROOFING
MEMBRANE WATERPROOFING (SHEET TYPE 2) SHALL BE APPLIED TO THE TOP SURFACE OF THE PRECAST CULVERT SECTIONS AND SHALL EXTEND VERTICALLY DOWN ALL SIDES FOR THE PORTIONS OF THE CULVERT WHICH SHALL BE IN CONTACT WITH THE BACKFILL. THE EXTERIOR JOINT GAP ON THE TOP AND SIDES BETWEEN THE PRECAST CULVERT SECTIONS SHALL BE FILLED WITH PORTLAND CEMENT MORTAR PRIOR TO INSTALLING THE MEMBRANE WATERPROOFING. JOINT WRAP AS SPECIFIED IN 603.06 AND CONCREATE SEALING AS SPECIFIED IN 603.08 ARE NOT REQUIRED UNDER THE LIMITS OF THE MEMBRANE WATERPROOFING. PAYMENT FOR THE MEMBRANE WATERPROOFING SHALL BE AT THE CONTRACT PRICE BID PER SQUARE YARD FOR ITEM 512, TYPE 2 WATERPROOFING.

PRECAST WINGWALLS, HEADWALLS AND FOOTERS
AT THE OPTION OF THE CONTRACTOR, A PRECAST WINGWALL, HEADWALL, OR FOOTER MAY BE FURNISHED PER ITEM 602. THE PRECAST OPTION FURNISHED WILL MEET THE CAST-IN-PLACE STRUCTURAL DESIGN LOADINGS, DESIGN HEIGHT, AND DESIGN LENGTH DIMENSIONS.

FULL COMPENSATION FOR THE PRECAST WINGWALL, HEADWALL, OR FOOTER IS THE NUMBER OF CUBIC YARDS OF ITEM 511 OR SUPPLEMENTAL SPECIFICATION 898 AND POUNDS OF ITEM 509 FOR THE CORRESPONDING CAST-IN-PLACE STRUCTURE.

WHEN SEALING OF CONCRETE SURFACES (EPOXY) IS SPECIFIED ON THE HEADWALLS OF A PRECAST CONCRETE BOX CULVERT, ANY PRECAST CULVERT SECTIONS BEYOND THE LIMIT OF THE MEMBRANE WATERPROOFING SHALL BE SEALED USING EPOXY SEALER. PAYMENT FOR THE SEALING OF THE PRECAST CONCRETE BOX SURFACES SHALL BE MADE AT THE CONTRACT PRICE BID PER SQUARE YARD FOR ITEM 512 - SEALING OF CONCRETE SURFACES (EPOXY URETHANE).

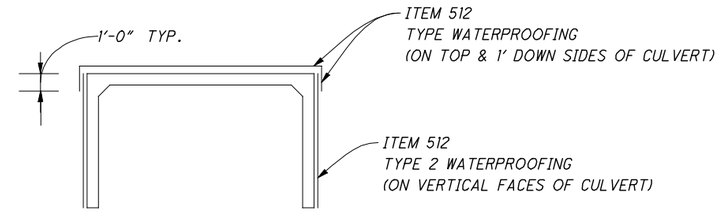

GENERAL SUMMARY (GUE - 660 - 2.52)

ITEM	ITEM EXT.	TOTAL	UNIT	DESCRIPTION
202	11000	LUMP		STRUCTURE REMOVED
503	21100	67	CY	UNCLASSIFIED EXCAVATION
509	10000	6015	LB	EPOXY COATED REINFORCING STEEL
511	46000	12	CY	CLASS C CONCRETE, WINGWALL
511	46500	54	CY	CLASS C CONCRETE, FOOTING
511	46600	1	CY	CLASS C CONCRETE, MISC. : HEADWALLS
512	33000	128	SY	TYPE 2 WATERPROOFING
512	10100	34	SY	SEALING OF CONCRETE SURFACES (EPOXY URETHANE)
516	13600	27	SF	1" PREFORMED EXPANSION JOINT FILLER
518	21200	16	CY	POROUS BACKFILL WITH FILTER FABRIC
601	32100	57	CY	ROCK CHANNEL PROTECTION, TYPE B WITH FILTER
601	34200	43	CY	ROCK CHANNEL PROTECTION, TYPE C WITHOUT FILTER
603	70000	40.00	FT	CONDUIT, TYPE A, PRECAST REINFORCED CONCRETE FLAT
				TOPPED THREE SIDED CULVERT
				(14'-0" SPAN X 6'-0" RISE)

CULVERT ESTIMATED QUANTITIES
STA. 133+13.00

GUE-660-2.52

CALCULATED KEW
CHECKED JOH

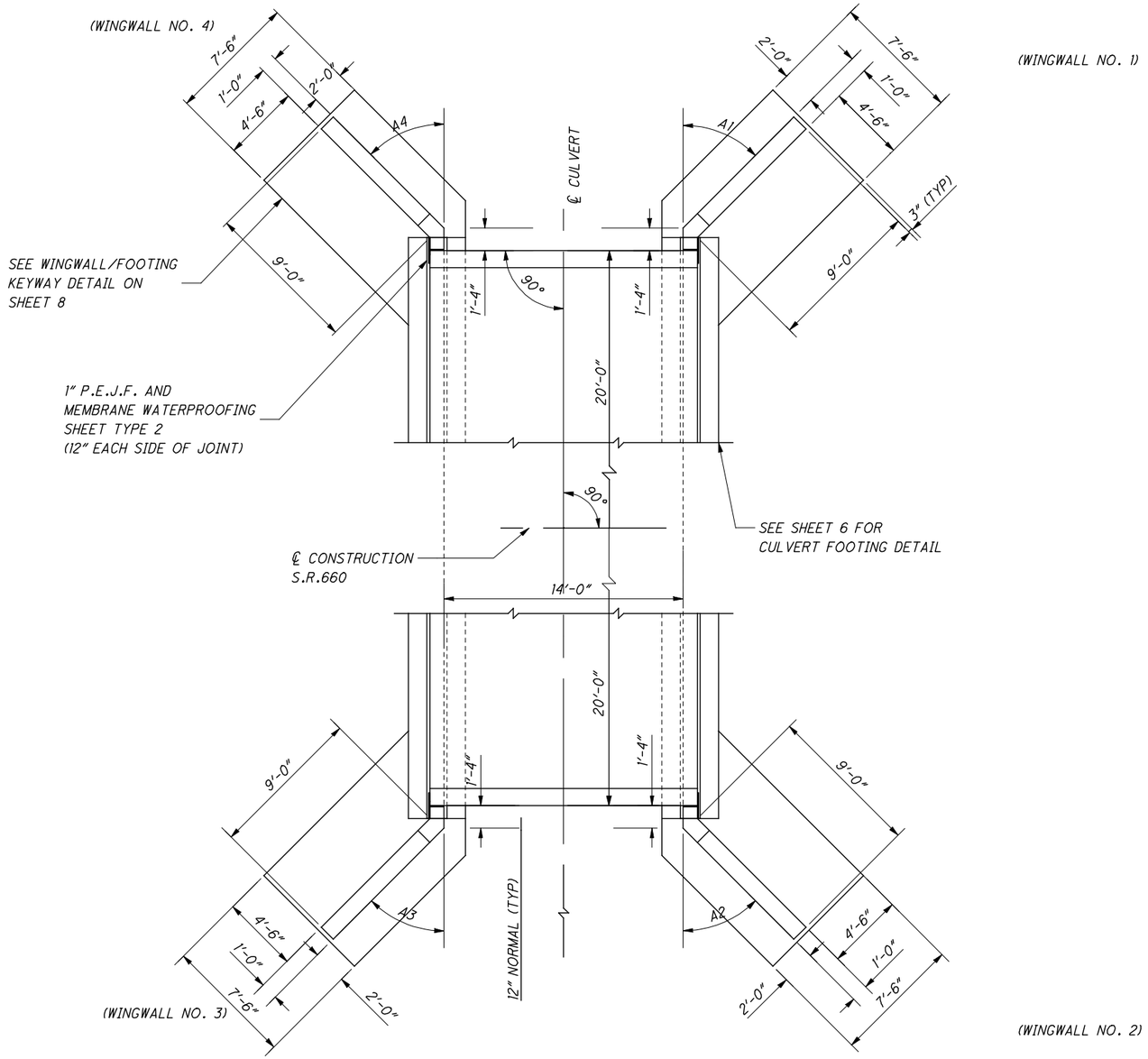

CULVERT & WINGWALL LAYOUT

NOTE: SEE TABLE THIS SHEET FOR VALUES OF A1,A2,A3,A4

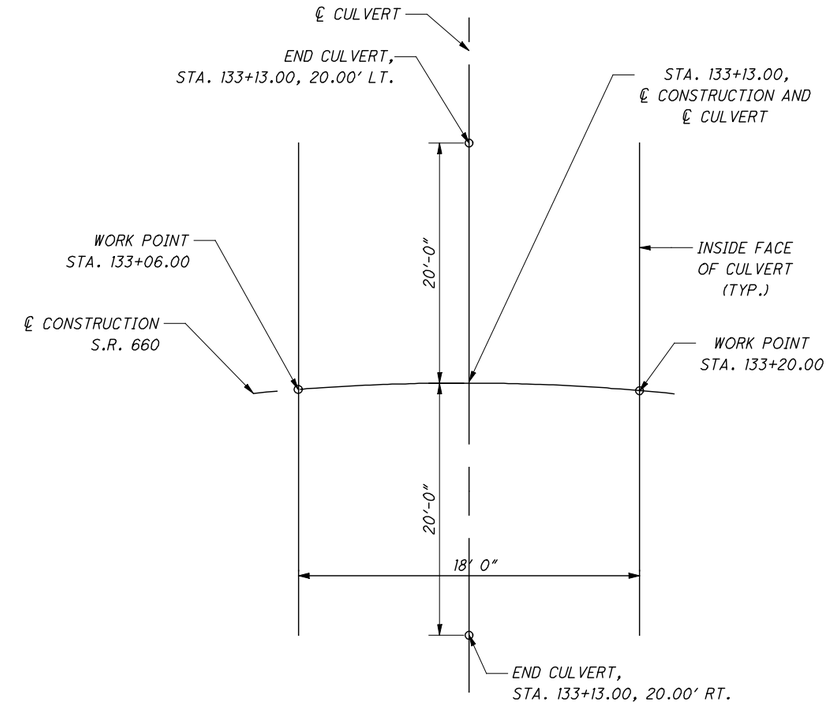

REFERENCE DIAGRAM

WINGWALL ANGLES	
A1	45°0'0"
A2	45°0'0"
A3	45°0'0"
A4	45°0'0"

CULVERT LAYOUT STA. 133+13.00

GUE-660-2.52

CALCULATED KEW
CHECKED JOH

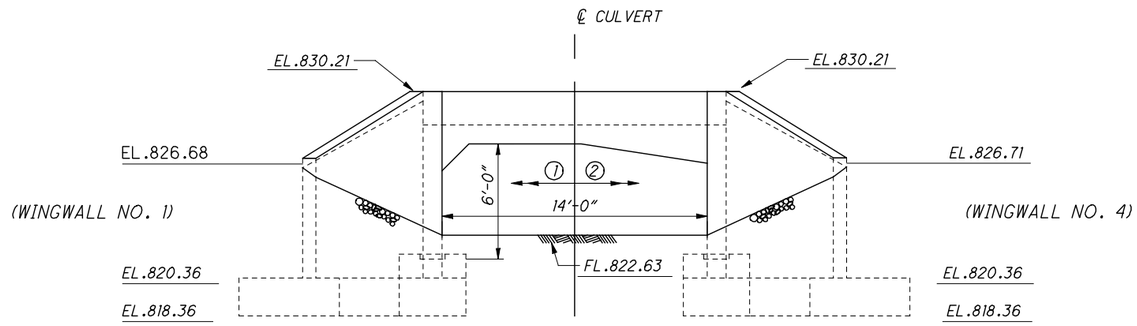

INLET ELEVATION

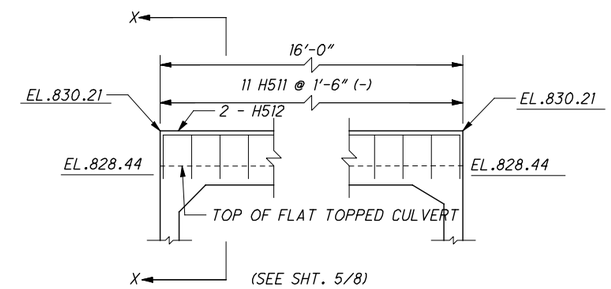

INLET HEADWALL REINFORCING DETAIL

(FOR FLAT-TOPPED CULVERTS ONLY)

NOTE: ① - SHORT HAUNCH PRECAST UNIT
② - LONG HAUNCH PRECAST UNIT

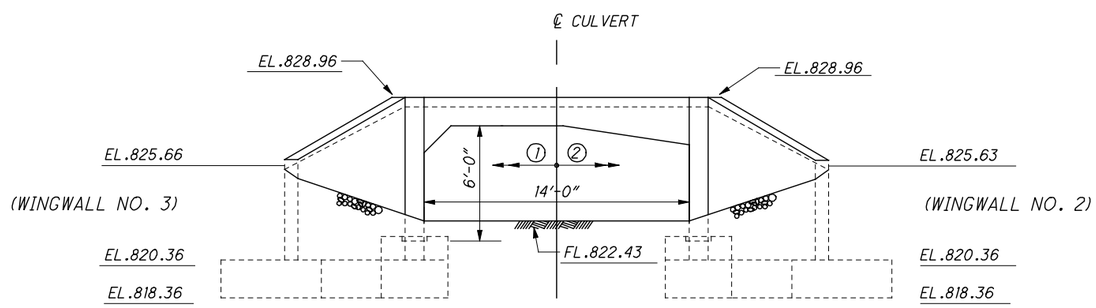

OUTLET ELEVATION

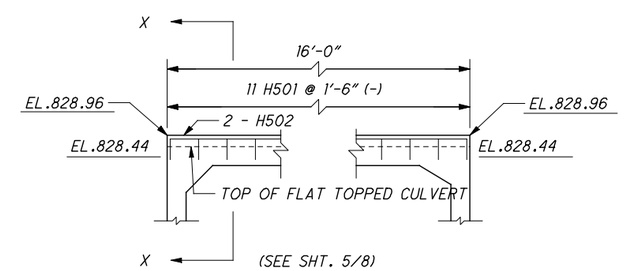

OUTLET HEADWALL REINFORCING DETAIL

(FOR FLAT-TOPPED CULVERTS ONLY)

CULVERT ELEVATION
STA. 133+13.00

GUE-660-2.52

CALCULATED KEW
CHECKED JOH

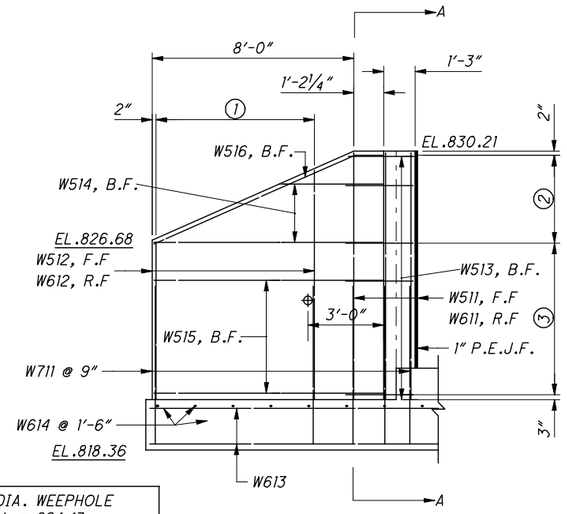

NOTE: 4" DIA. WEEPHOLE
ELEV. = 824.13

WINGWALL 1 ELEVATION

1 SER. OF 5 @ 1'-6"
2 3 SPACES @ 1'-1¾"
3 4 SPACES @ 1'-6"

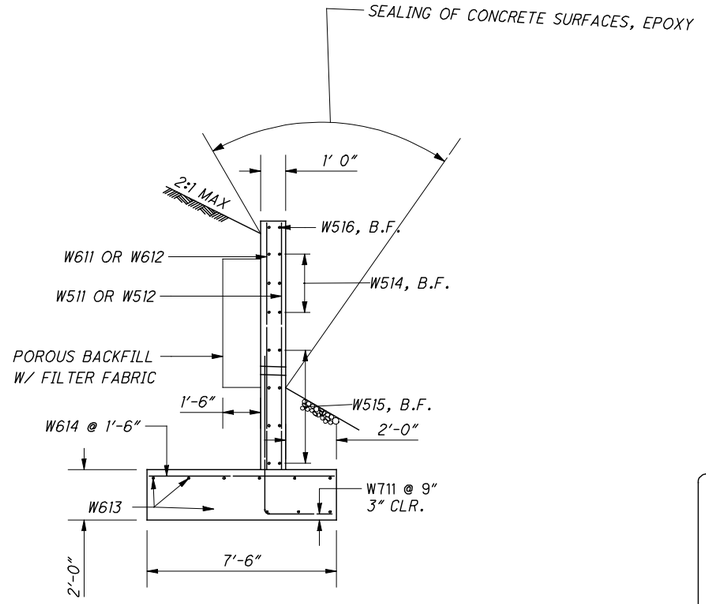

SECTION A-A

LEGEND

F.F. - FRONT FACE
R.F. - REAR FACE
B.F. - BOTH FACE

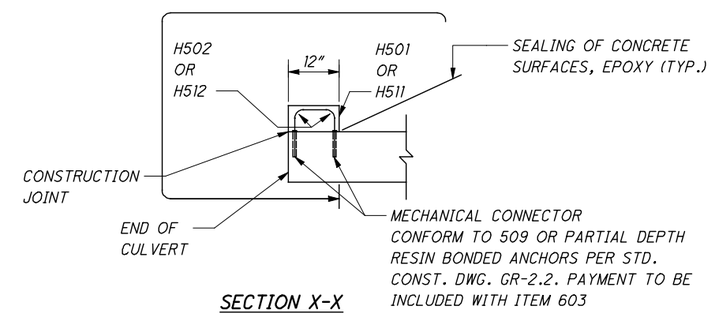

SECTION X-X

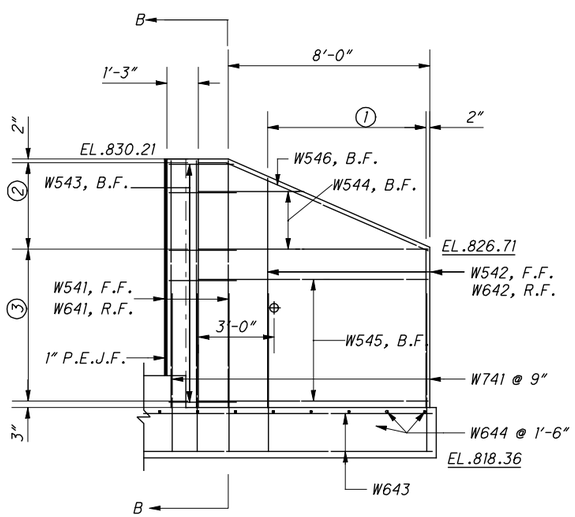

WINGWALL 4 ELEVATION

NOTE: 4" DIA. WEEPHOLE
ELEV. = 824.14

1 SER. OF 5 @ 1'-6"
2 3 SPACES @ 1'-1¾"
3 5 SPACES @ 1'-2½"

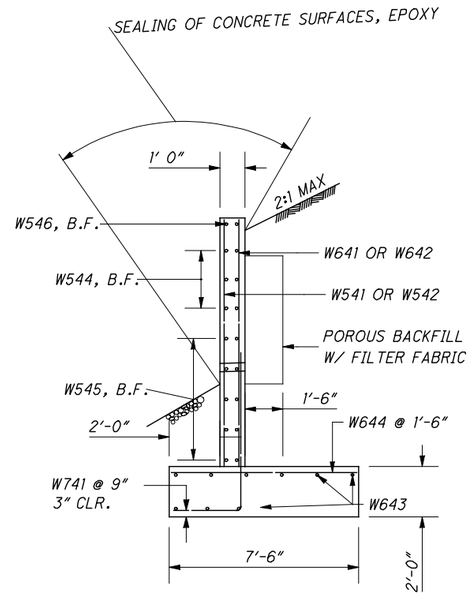

SECTION B-B

NOTES:

1. ITEM 518 - POROUS BACKFILL W/FILTER FABRIC 1'-6" THICK SHALL BE PLACED BEHIND THE WINGWALLS ONLY AND SHALL EXTEND 1' BELOW THE EMBANKMENT SURFACE. GEOTEXTILE FABRIC SHALL BE PLACED BETWEEN THE POROUS BACKFILL AND REPLACED EXCAVATION ADJACENT TO THE STRUCTURE. IT SHALL TURN UNDER THE BOTTOM OF THE POROUS BACKFILL, AND RETURN 6" ABOVE THE WEEPHOLE.

2. 1" PREFORMED EXPANSION JOINT FILLER SHALL BE EXTENDED FROM TOP OF FOOTING TO TOP OF WALL.

WINGWALL NO. 1 AND 4 DETAILS
STA. 133+13.00

GUE-660-2.52

CALCULATED KEW
CHECKED JOH

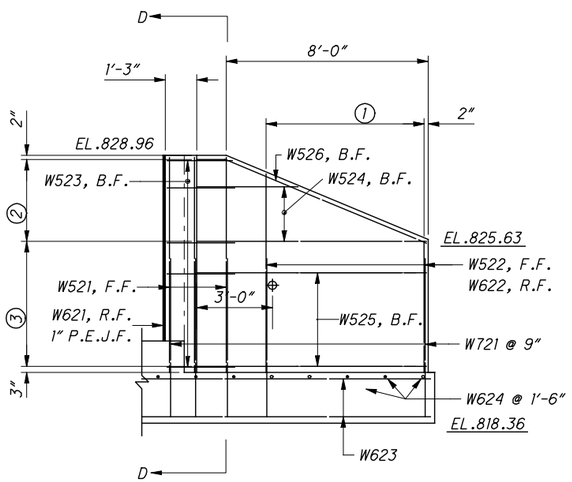

WINGWALL 2 ELEVATION

NOTE: 4" DIA. WEEPHOLE
ELEV. = 823.65

1 SER. OF 5 @ 1'-6"
2 3 SPACES @ 1'-1"
3 4 SPACES @ 1'-2¾"

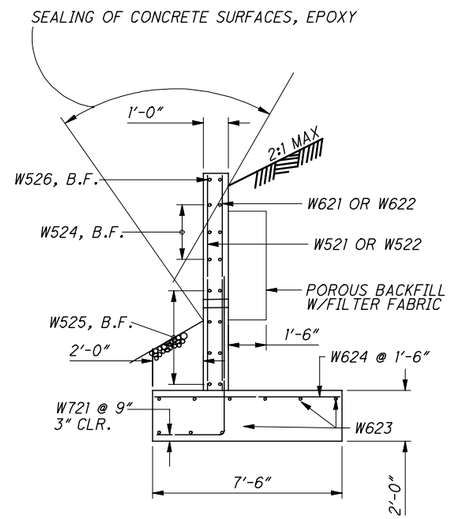

SECTION D-D

LEGEND

F.F. - FRONT FACE
R.F. - REAR FACE
B.F. - BOTH FACE

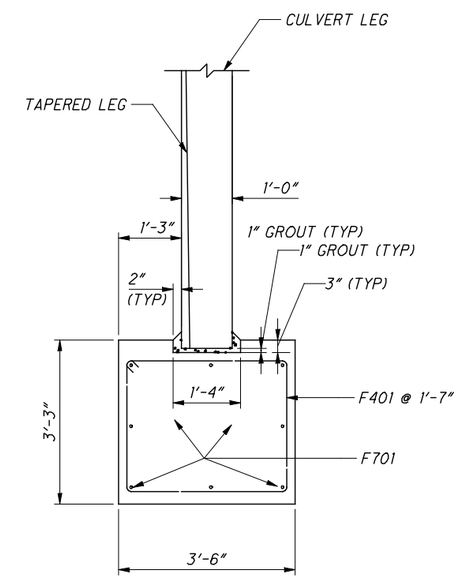

CULVERT FOOTING SECTION

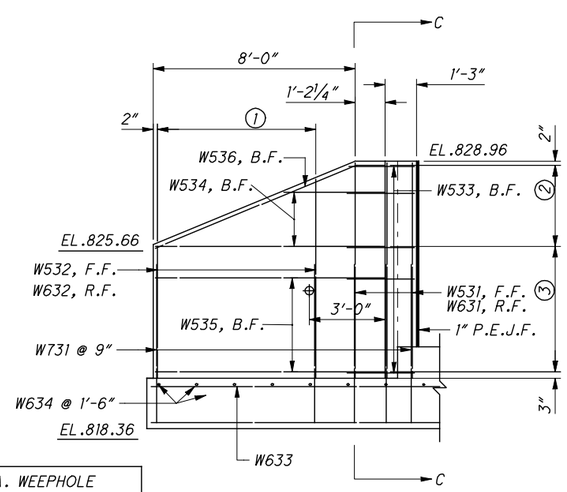

NOTE: 4" DIA. WEEPHOLE
ELEV. = 823.66

WINGWALL 3 ELEVATION

1 SER. OF 5 @ 1'-6"
2 3 SPACES @ 1'-0¾"
3 4 SPACES @ 1'-3"

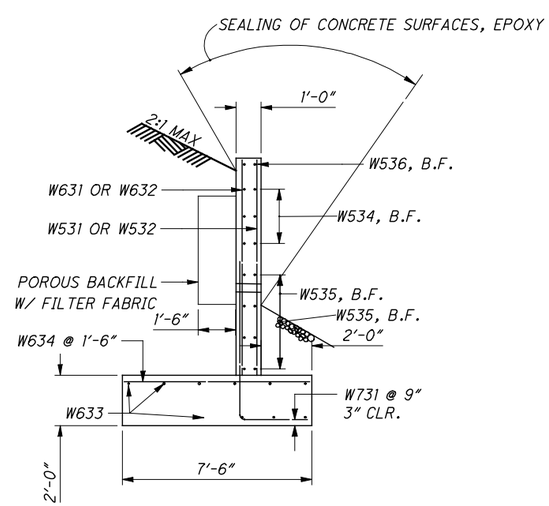

SECTION C-C

WINGWALL NO. 2 AND 3 DETAILS
STA. 133+13.00

GUE-660-2.52

CALCULATED KEW
CHECKED JOH

FOOTING DETAILS
STA. 133+13.00

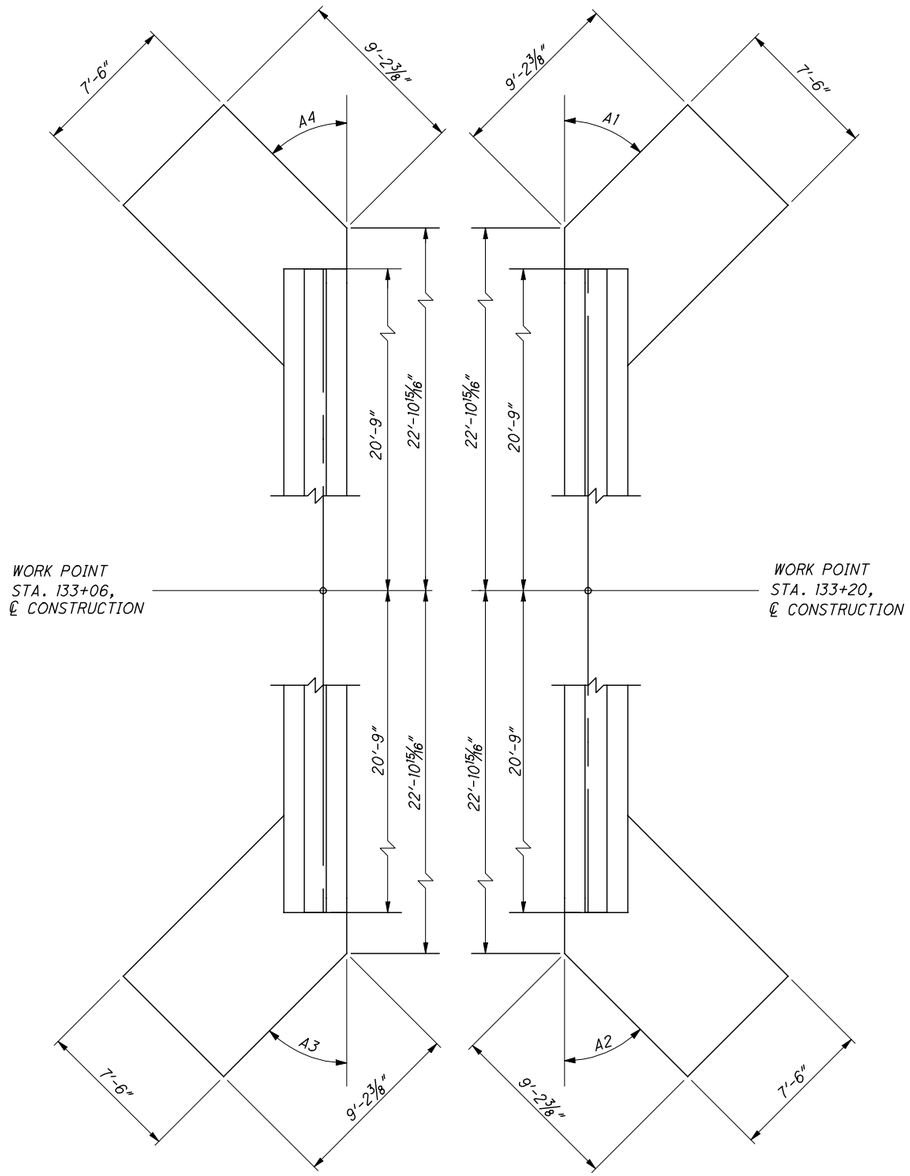

FOOTING LAYOUT

SEE TABLE ON SHEET 3 FOR VALUES OF A1 THRU A4

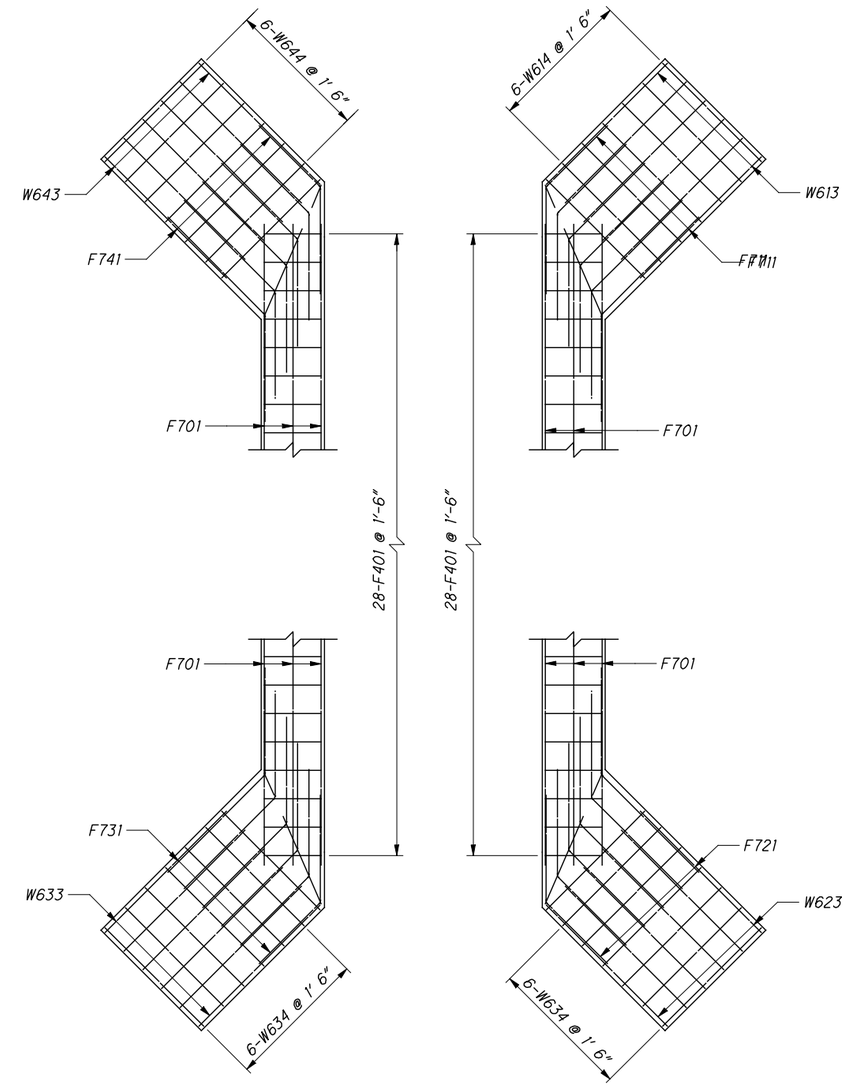

FOOTING REINFORCING PLAN

GUE-660-2.52

CALCULATED KEW
CHECKED JOH

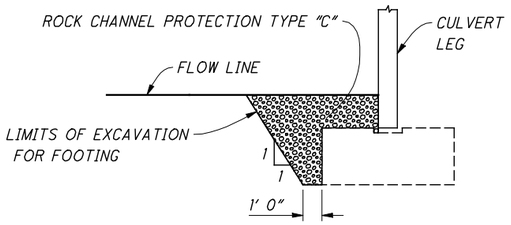

ROCK CHANNEL PROTECTION INSIDE CULVERT

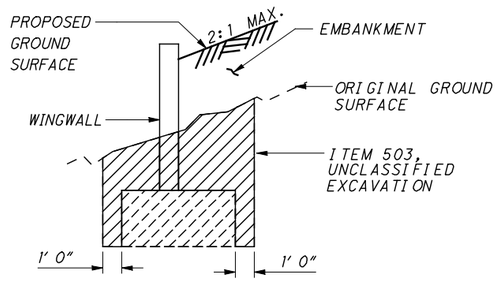

LIMITS OF UNCLASSIFIED EXCAVATION (WINGWALL)

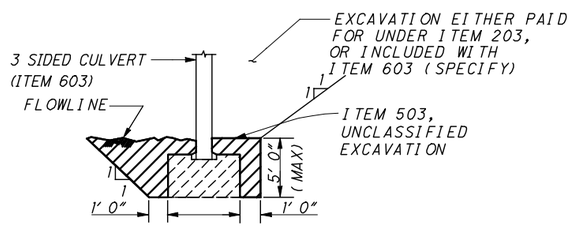

LIMITS OF UNCLASSIFIED EXCAVATION (CULVERT)

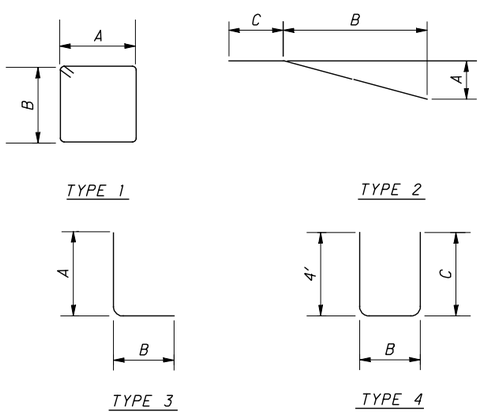

BENDING DIAGRAMS

REINFORCING STEEL LIST

MARK	NO.	LENGTH	WEIGHT	TYPE	A	B	C	INCR	REMARKS
				WINGWALL 1					
W511	3	9'-9"	31	STR					
	1	6'-3"							
W512	S.O.	TO	40	STR				0'-9"	
	5	9'-1"							
W513	16	2'-4"	39	2	0'-10"	0'-10"	1'-2"		
	2	4'-0"							
W514	S.O.	TO	41	STR				2'-7"	
	3	9'-1"							
W515	8	9'-1"	76	STR					
W516	2	9'-9"	20	2	3'-4"	7'-11"	1'-2"		
W611	3	9'-9"	44	STR					
	1	6'-3"							
W612	S.O.	TO	58	STR				0'-9"	
	5	9'-1"							
W613	9	9'-0"	122	STR					
W614	6	7'-4"	66	STR					
W711	14	8'-9"	250	3	6'-3"	2'-8"			
				WINGWALL 2					
W521	3	8'-6"	27	STR					
	1	5'-2"							
W522	S.O.	TO	34	STR				0'-8"	
	5	7'-10"							
W523	16	2'-4"	39	2	0'-10"	0'-10"	1'-2"		
	2	4'-1"							
W524	S.O.	TO	41	STR				2'-6"	
	3	9'-1"							
W525	8	9'-1"	76	STR					
W526	2	9'-8"	20	2	3'-2"	7'-11"	1'-2"		
W621	3	8'-6"	38	STR					
	1	5'-2"							
W622	S.O.	TO	49	STR				0'-8"	
	5	7'-10"							
W623	9	9'-0"	122	STR					
W624	6	7'-4"	66	STR					
W721	14	8'-9"	250	3	6'-3"	2'-8"			
				WINGWALL 3					
W531	3	8'-6"	27	STR					
	1	5'-3"							
W532	S.O.	TO	34	STR				0'-8"	
	5	7'-10"							
W533	16	2'-4"	39	2	0'-10"	0'-10"	1'-2"		
	2	4'-0"							
W534	S.O.	TO	41	STR				2'-6"	
	3	9'-1"							
W535	8	9'-1"	76	STR					
W536	2	9'-8"	20	2	3'-2"	7'-11"	1'-2"		
SUBTOTAL			1768						

S.O. - SERIES OF

MARK	NO.	LENGTH	WEIGHT	TYPE	A	B	C	INCR	REMARKS
W631	3	8'-6"	38	STR					
	1	5'-3"							
W632	S.O.	TO	49	STR				0'-8"	
	5	7'-10"							
W633	9	9'-0"	122	STR					
W634	6	7'-4"	66	STR					
W731	14	8'-9"	250	3	6'-3"	2'-8"			
				WINGWALL 4					
W541	3	9'-9"	31	STR					
	1	6'-3"							
W542	S.O.	TO	40	STR				0'-8"	
	5	9'-1"							
W543	18	2'-4"	44	2	0'-10"	0'-10"	1'-2"		
	2	4'-1"							
W544	S.O.	TO	41	STR				2'-6"	
	3	9'-1"							
W545	10	9'-1"	95	STR					
W546	2	9'-9"	20	2	3'-4"	7'-11"	1'-2"		
W641	3	9'-9"	44	STR					
	1	6'-3"							
W642	S.O.	TO	58	STR				0'-8"	
	5	9'-1"							
W643	9	9'-0"	122	STR					
W644	6	7'-4"	66	STR					
W741	14	8'-9"	250	3	6'-3"	2'-8"			
				CULVERT FOOTING					
F401	56	12'-0"	449	1	3'-2"	2'-7"			
F701	32	21'-11"	1434	STR					
	1	10'-3"			3'-3"	3'-3"			
F711	S.O.	TO	214	2	TO	TO	5'-8"	0'-4"	
	9	13'-0"			5'-2"	5'-2"			
	1	10'-3"			3'-3"	3'-3"			
F721	S.O.	TO	214	2	TO	TO	5'-8"	0'-4"	
	9	13'-0"			5'-2"	5'-2"			
	1	10'-3"			3'-3"	3'-3"			
F731	S.O.	TO	214	2	TO	TO	5'-8"	0'-4"	
	9	13'-0"			5'-2"	5'-2"			
	1	10'-3"			3'-3"	3'-3"			
F741	S.O.	TO	214	2	TO	TO	5'-8"	0'-4"	
	9	13'-0"			5'-2"	5'-2"			
				HEADWALL					
H501	11	2'-7"	30	4	1'-1"	0'-8"	1'-1"		
H502	2	15'-10"	33	STR					
H511	11	5'-1"	58	4	2'-4"	0'-8"	2'-4"		
H512	2	15'-10"	33	STR					
SUBTOTAL			4229						

TOTAL CARRIED TO SHEET 2 OF 8

REINFORCING SCHEDULE
STA. 133+13.00

GUE-660-2.52

EXISTING STRUCTURE

TYPE: 48" AND 54" CORRUGATED METAL PIPES

SKEW: 16° L.F.

ALIGNMENT: TANGENT

PROPOSED STRUCTURE

TYPE: 53"X83" ELLIPTICAL CONCRETE PIPE

SKEW: 16° L.F.

ALIGNMENT: TANGENT

HYDRAULIC DESIGN DATA

DRAINAGE AREA : 344 ACRES
Q(25): 230 CFS
HW(25): 666.24 FT
V(25): 11 FT/S
Q(100): 325 CFS
HW(100): 668.81 FT
V(100): 13 FT/S

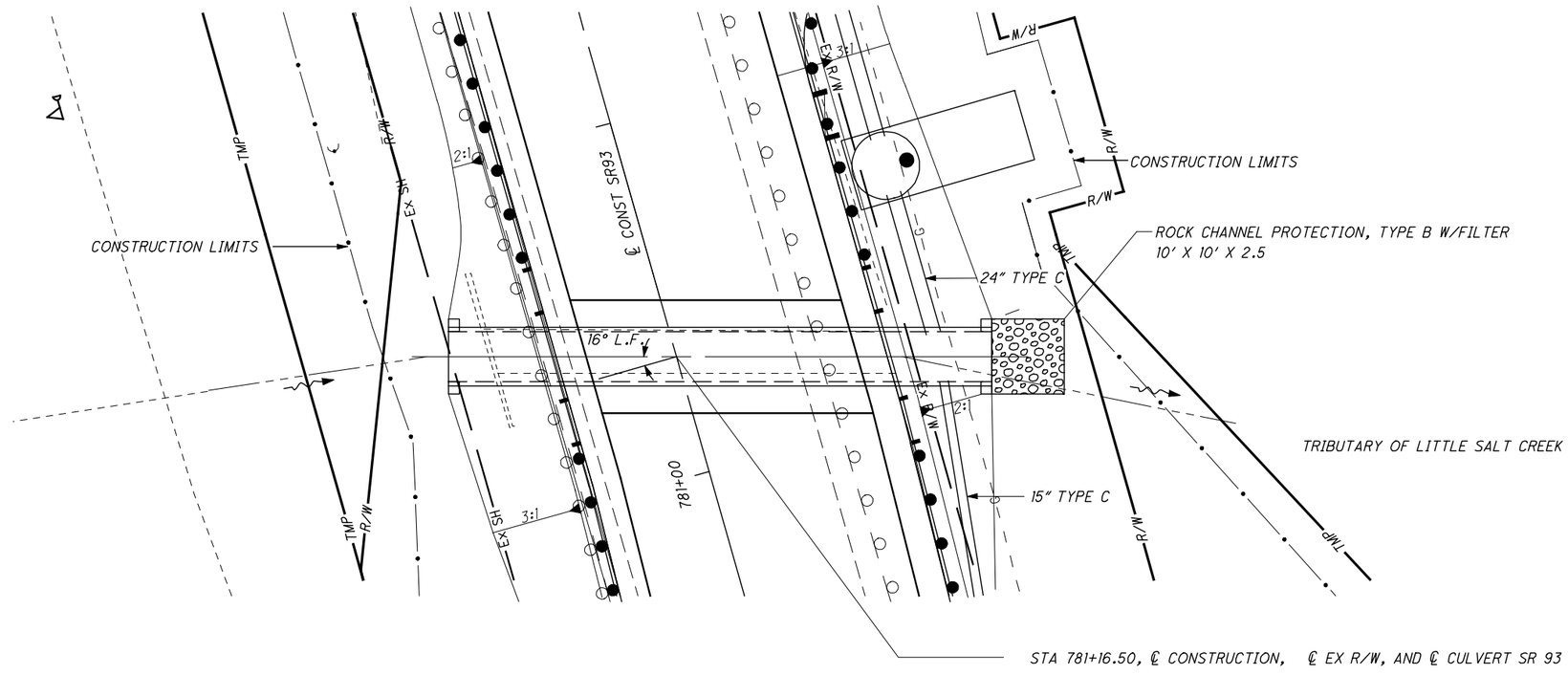

ESTIMATED QUANTITES CARRIED TO GENERAL SUMMARY

601	ROCK CHANNEL PROTECTION TYPE B W/FILTER	9 CU.YD.
602	CONCRETE MASONRY	3.3 CU.YD.
603	53" X 83" CONDUIT, TYPE A, 706.04 HE I	75 FT.

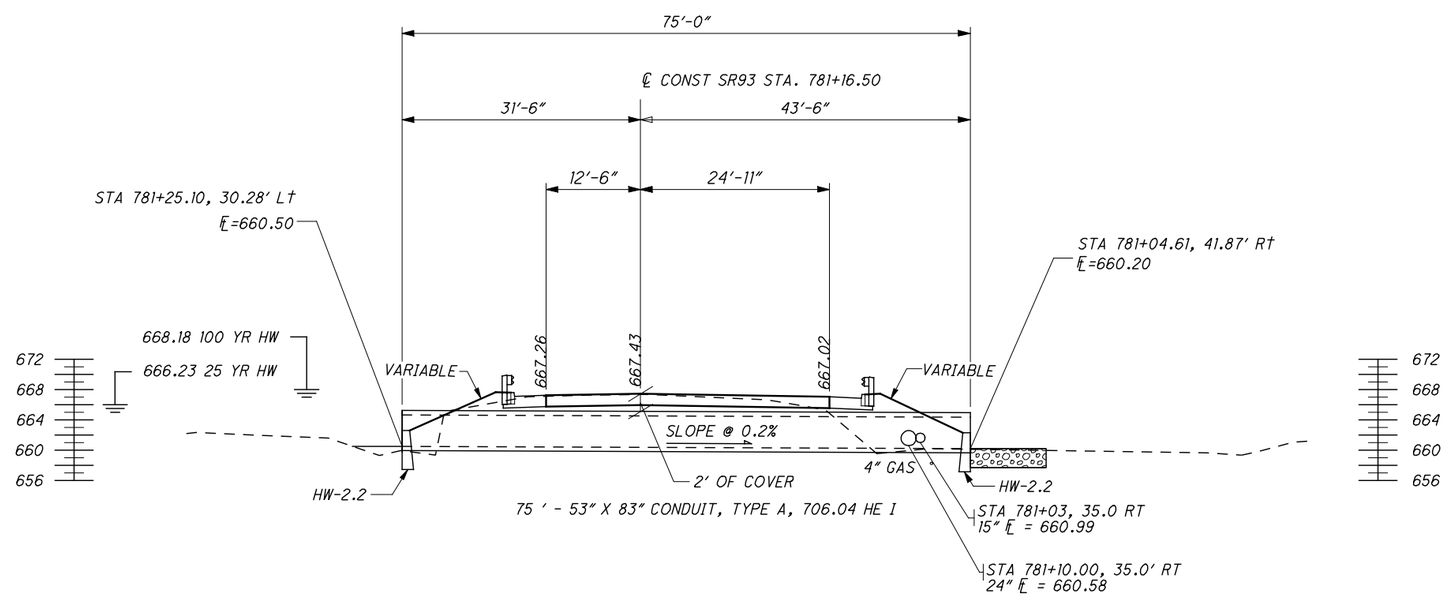

HORIZONTAL SCALE IN FEET
0 5 10 20

CALCULATED MRV
CHECKED MLC

CULVERT DETAIL STA 781+16.50

JAC-93-14.35

I:\pr\V3Stds\SamplePlans\Future Revision\1312\1312_7.dgn 03-OCT-2006 9:31AM mwawszki

For Roadway and Drainage Details
See Plan and Profile Sheets 10-14.
For Storm Sewer Profiles See Sheet 17.

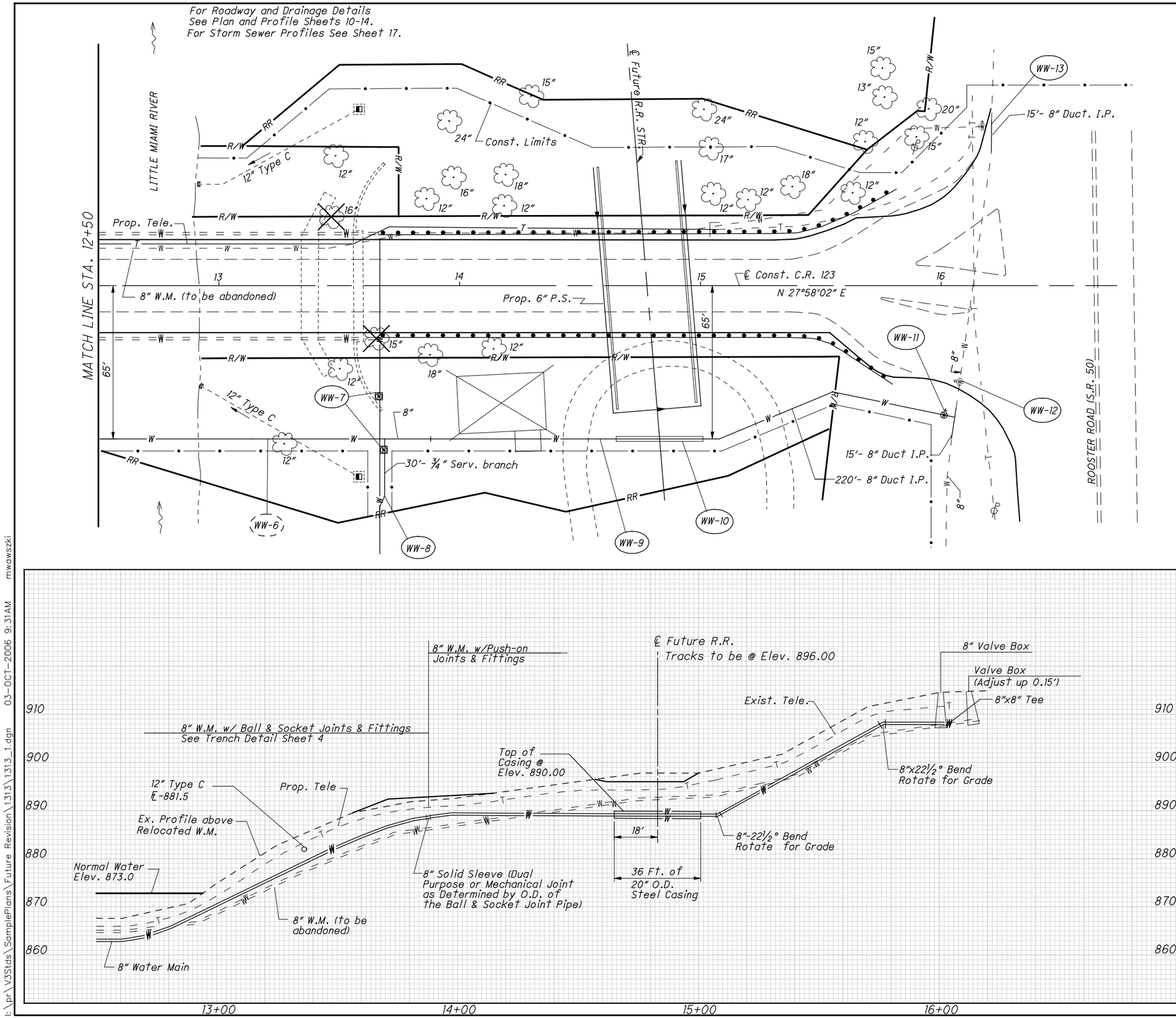

REF NO.	STATION FROM	STATION TO	SIDE	8" Water Main Ductile Iron Pipe ANSI Class 53, Push-on Joints and Fittings FT	20" Steel Pipe Encasement Open Cut FT	Valve Box Adjusted to Grade EACH	3/4" Copper Service Branch FT	Meter and Chamber Removed and Reset EACH	Sheeting and Bracing Ordered and Left in Place MBF	8" Gate Valve & Valve Box EACH
WW-7	13+66	13+70	RT					1		
WW-8	13+67	13+70	RT				30			
WW-9	13+88	16+07	RT	235						
WW-10	14+65	15+01	RT		36					1
WW-11	16+00		RT			1				
WW-12	16+08		RT						1	
WW-13	16+20		LT	15						1
TOTALS CARRIED TO GENERAL SUMMARY				250	36	1	30	1	1	1

638

HORIZONTAL SCALE IN FEET 0 10 20 40

CALCULATED GJB
CHECKED DJK

WATER WORK PLAN
STA. 12+50 TO STA. 16+00

CUY-CR123-6.55

I:\pr\V3Stds\SamplePlans\Future Revision\1313\1313_1.dgn 03-OCT-2006 9:31AM mwawszki

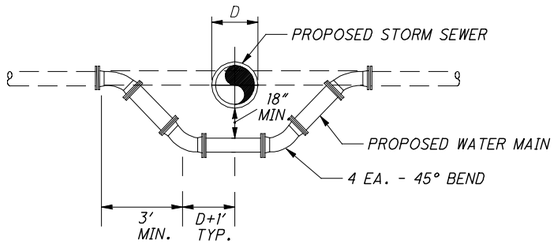

DETAIL "A"

EXISTING WATER MAIN RELOCATION UNDER PROPOSED UTILITY LINE (ELEVATION)

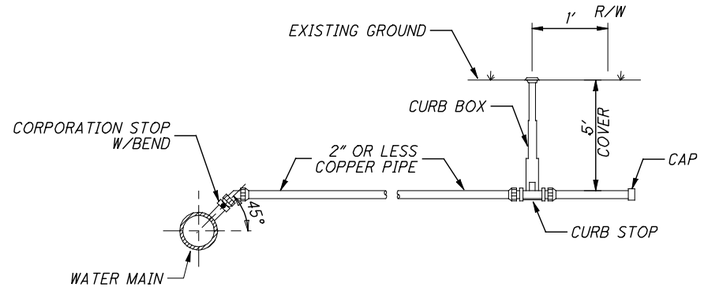

DETAIL "B"

TYPICAL 2" OR LESS SERVICE CONNECTION (ELEVATION)

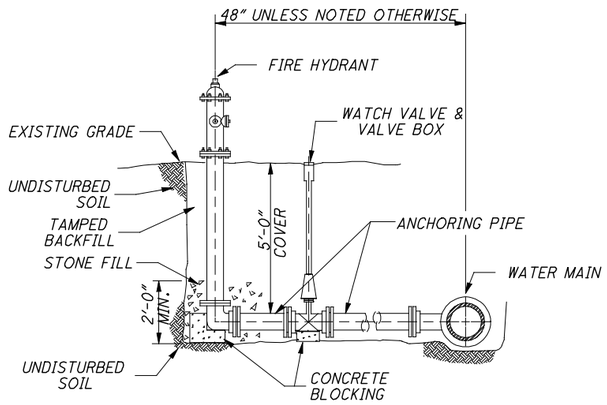

DETAIL "C"

HYDRANT ASSEMBLY PERPENDICULAR TO WATER (ELEVATION)

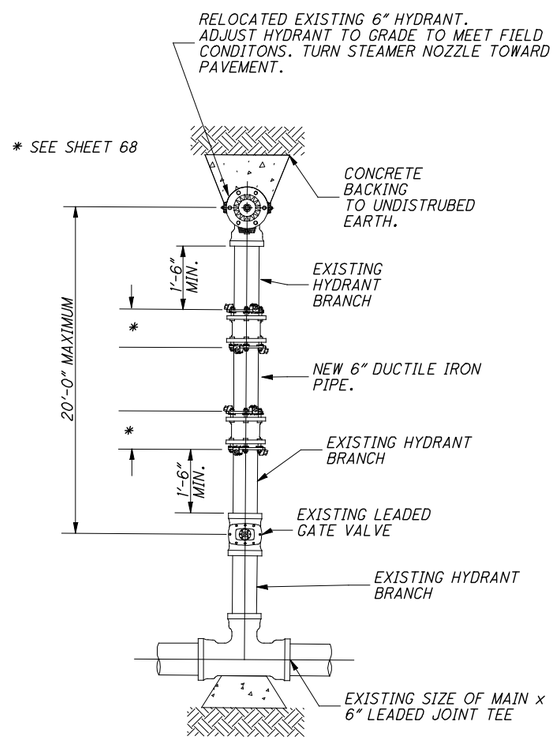

DETAIL "E"

FIRE HYDRANT EXTENDED AND ADJUSTED TO GRADE (PLAN)

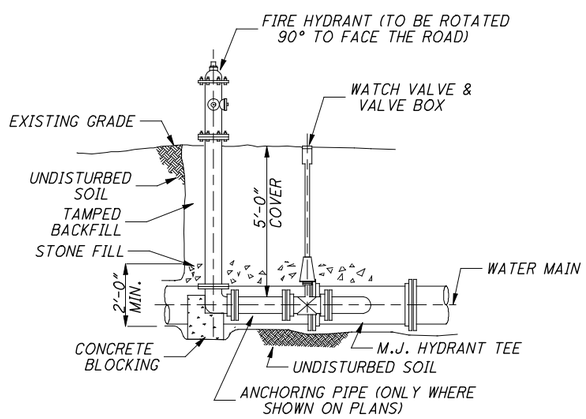

DETAIL "D"

HYDRANT ASSEMBLY PARALLEL TO WATER MAIN (ELEVATION)

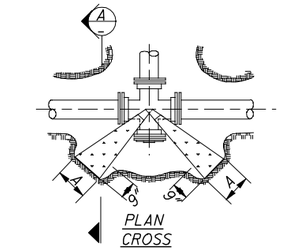

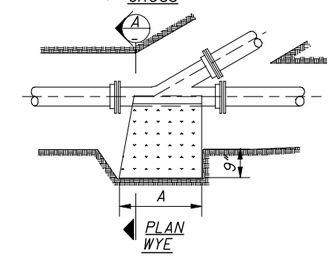

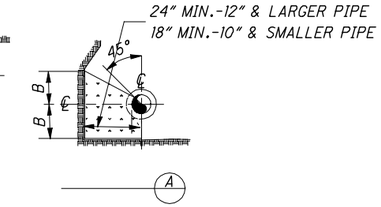

TYPE	SIZE	CROSS A	CROSS B	WYE A	WYE B
2000 P.S.F. SOIL	6"*	11"	13"	10"	12"
	8"	15"	17"	14"	14"
	10"	18"	22"	15"	20"
	12"	21"	26"	18"	23"
	14"	24"	30"	21"	27"
	16"	28"	33"	24"	30"
	20"	33"	42"	27"	43"
	24"	40"	49"	32"	50"

*6" OR LESS

NOTE: BASED ON 150 P.S.I. STATIC PRESSURE PLUS A.W.W.A. WATER HAMMER. ALL BEARING SURFACES TO BE CARRIED TO UNDISTURBED GROUND.

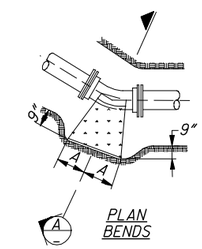

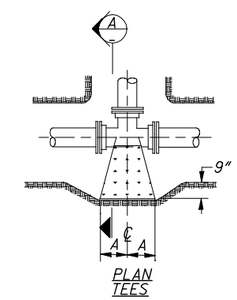

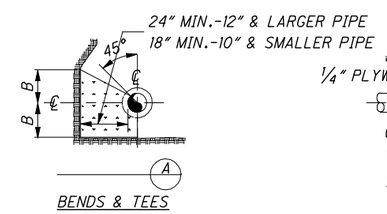

TYPE	SIZE	90° BENDS A	90° BENDS B	45° BENDS A	45° BENDS B	22-1/2° & 11-1/4° BENDS A	22-1/2° & 11-1/4° BENDS B	TEES A	TEES B	PLUGS C	PLUGS D
2000 P.S.F. SOIL	6"	18"	11"	10"	11"	6"	9"	11"	13"	10"	24"
	8"	25"	14"	14"	14"	9"	11"	15"	17"	12"	32"
	10"	27"	20"	16"	19"	10"	15"	18"	22"	14"	40"
	12"	33"	23"	18"	23"	12"	18"	21"	26"	16"	47"
	14"	39"	26"	22"	26"	13"	22"	24"	30"	18"	54"
	16"	43"	30"	24"	30"	14"	26"	28"	33"	20"	61"
	20"	50"	39"	27"	39"	17"	32"	33"	42"	24"	74"
	24"	60"	45"	33"	45"	20"	38"	40"	49"	28"	88"

*6" OR LESS

NOTE:
BASED ON 150 P.S.I. STATIC PRESSURE PLUS A.W.W.A. WATER HAMMER.
ALL BEARING SURFACES TO BE CARRIED TO UNDISTURBED GROUND.

WATER WORK DETAILS

TUS-10-13.15

I:\pr\V3Stds\SamplePlans\Future Revision\1313\1313_2.dgn 03-OCT-2006 9:31AM mwawszki

SP 1314-1
DATE:OCTOBER 2006

CALCULATED DAM
CHECKED JAG

PAVEMENT MARKING SUBSUMMARY

SHEET NO.	REFERENCE NO.	LOCATION	STATION FROM	STATION TO	SIDE	202 RAISED PAVEMENT MARKER REMOVED EACH	621 RPM (2-way yellow) EACH	621 RPM (1-way white) EACH	642 EDGE LINE (White) MILE	642 EDGE LINE, TYPE 1 (White) MILE	642 CENTER LINE, TYPE 1 (Dashed-Solid) MILE	642 CHANNELIZING LINE, TYPE 1 FT	642 STOP LINE, TYPE 1 FT	642 LANE ARROW, TYPE 1 EACH	642 WORD ON PAVEMENT, 96", TYPE 1 EACH	642 ISLAND MARKING, TYPE 1 (Yellow) SQ FT
56	CL-1	℄ Const. S.R. 17	46+73	48+00	RT.	7	7				0.024					
56	CL-2	℄ Const. S.R. 17	47+90	48+47	LT.						0.010					
56	CL-3	℄ Const. S.R. 17	48+00	48+47	RT.	2	2				0.009					
56	CL-4	℄ Const. S.R. 17	48+47	53+00	LT.		11				0.086					
56	CL-5	℄ Const. S.R. 17	48+47	53+00	RT.	11	11				0.086					
57	CL-6	℄ Const. S.R. 17	53+00	55+48	LT.	6	6				0.047					
57	CL-7	℄ Const. S.R. 17	53+00	55+48	RT.		6				0.047					
57	CL-8	℄ Const. S.R. 17	55+48	57+86	LT.	12	12				0.045					
57	CL-9	℄ Const. S.R. 17	55+48	56+00	RT.						0.011					
57	CL-10	℄ Const. S.R. 17	58+68	59+25	RT.	3	3				0.011					
57	CL-11	℄ Const. MEYERS RD.	10+40	11+15	℄	4	4				0.014					
57	CL-12	℄ Const. MEYERS RD.	8+55	9+41	℄	5	5				0.016					
58	CL-13	℄ Const. S.R. 17	59+25	60+39	RT.	6	6				0.022					
58	CL-14	℄ Const. S.R. 17	64+16	65+00	℄	1	1				0.016					
58	CL-15	℄ Const. S.R. 17	65+00	65+66	℄	2	1				0.013					
56	EL-1	℄ Const. RAMP A	10+25	10+65	RT.	2			0.009							
56	EL-2	℄ Const. S.R. 17	45+52	48+00	LT.	12		2		0.047						
56	EL-3	℄ Const. S.R. 17	45+30	48+00	RT.	14		12		0.051						
56	EL-4	℄ Const. RAMP B	9+18	9+75	RT.	3		14	0.011							
56	EL-5	℄ Const. S.R. 17	48+00	53+00	LT.	14		3		0.095						
56	EL-6	℄ Const. S.R. 17	48+00	53+00	RT.	14		14		0.095						
57	EL-7	℄ Const. MEYERS RD.	53+00	11+00	LT.	24		14		0.113						
57	EL-8	℄ Const. MEYERS RD.	53+00	8+55	RT.	23		24		0.111						
57	EL-9	℄ Const. MEYERS RD.	11+15	59+25	LT.	8		23		0.029						
57	EL-10	℄ Const. MEYERS RD.	8+55	59+25	RT.	11		8		0.041						
58	EL-11	℄ Const. S.R. 17	59+25	65+00	LT.	21		11		0.109						
58	EL-12	℄ Const. S.R. 17	59+25	65+00	RT.	16		22		0.109						
58	EL-13	℄ Const. S.R. 17	65+00	65+66	LT.	1		29		0.013						
58	EL-14	℄ Const. S.R. 17	65+00	65+66	RT.	1				0.013						
56	CH-1	℄ Const. S.R. 17	45+52	47+70	LT.							218				
57	CH-2	℄ Const. S.R. 17	56+20	57+86	RT.			11				166				
57	CH-3	℄ Const. S.R. 17	58+68	59+25	LT.			9				57				
58	CH-4	℄ Const. S.R. 17	59+25	60+20	LT.			3				95				
56	IM-1	℄ Const. S.R. 17	44+51	45+09	RT.			5			0.019	110				
56	IM-2	℄ Const. S.R. 17	45+52	46+73	RT.	6	6				0.046	10				108
58	IM-3	℄ Const. S.R. 17	60+39	64+16	LT&RT	11	12				0.143					26
							19									255
56	SL-1	℄ Const. RAMP A	10+28		LT&RT								29			
56	SL-2	℄ Const. S.R. 17	50+07	50+27	LT.								20			
57	SL-3	℄ Const. MEYERS RD.	9+41		LT.								12			
57	SL-4	℄ Const. MEYERS RD.	10+40		RT.								14			
56		℄ Const. S.R. 17	45+62											2		
56		℄ Const. S.R. 17	46+62												2	
56		℄ Const. S.R. 17	47+60											2		
56		℄ Const. S.R. 17	52+11											1		
56		℄ Const. S.R. 17	52+25											1		
57		℄ Const. S.R. 17	56+98												1	
57		℄ Const. S.R. 17	56+20											1		
57		℄ Const. S.R. 17	57+76											1		
57		℄ Const. S.R. 17	58+78											1		
		SUBTOTALS				240	112	204	0.020	0.824	0.663	656	75	9	3	389
		TOTALS CARRIED TO GENERAL SUMMARY				**240**	**316**		**0.84**		**0.66**	**656**	**75**	**9**	**3**	**389**

UNI-17-3.14

SP 1314-2
DATE: OCTOBER 2006

CALCULATED DAM
CHECKED JAG

630

SHEET NO.	REFERENCE NO.	LOCATION	STATION	SIDE	CODE	SIZE (INCHES)	SIGN, FLAT SHEET (SQ FT)	ONE WAY SUPPORT, No. 3 POST (FT)	GROUND MOUNTED SUPPORT, No. 3 POST (FT)	GROUND MOUNTED SUPPORT, W10x12 BEAM (FT)	REMOVAL OF GROUND MOUNTED SIGN & RE-ERECTION (EACH)	REMOVAL OF GROUND MOUNTED SIGN & DISPOSAL (EACH)	REMOVAL OF GROUND MOUNTED POST SUPPORT & DISPOSAL (EACH)	REMOVAL OF GROUND MOUNTED MAJOR SIGN & DISPOSAL (EACH)	SIGN ERECTED, EXTRUSHEET (SQ FT)	GROUND MOUNTED BEAM SUPPORT FOUNDATION (EACH)	BREAKAWAY BEAM CONNECTION (EACH)
56	S1	℄ Const. S.R. 17	44+91	LT.	M3-1-24	24" x 12"	2.0										
					M1-1-24-2	24" x 24"	4.0										
					M6-1-24	24" x 18"	3.0										
					M2-H7-66	66" x 24"	11.0										
56	S2		40+41	LT.	R1-1-48	48" x 48"	16.0	14.5	13.5								
					R6-1-48	48" x 18"	6.0										
					R5-1-36	36" x 36"	9.0										
					R6-1-48	48" x 18"	6.0										
56	S3		45+60	LT.	R3-H8ba-36	36" x 30"	7.5		12.5								
56	S4		47+80	LT.	D1-H6	192" x 72"				17.5-18.0					96	2.2	2
56	S5		48+40	RT.	R3-9b-24	24" x 36"	6.0		14								
					R3-H9j-24	24" x 6"	1.0										
56	S6		48+75	LT.	R3-H8dg-36	36" x 30"	7.5		12.5								
56	S7		49+93	LT.	D-3				10								
56	S8		50+05	LT.	R2-1-30	30" x 30"	6.25		12.5								
56	S9		46+20	RT.	M3-2-24	12" x 24"	2.0		14-14								
					M1-5-24-3	24" x 30"	5.0										
56	S10		54+36	RT.	R3-H8dg-36	36" x 30"			7.5								
57	S11		53+00	LT.	M2-1	24" x 12"	2.0		13								
					M1-1-24-2	24" x 24"	4.0										
57	S12		55+56	LT.	R3-H9j-24	24" x 6"	1.0		14								
					R3-9b-24	24" x 36"	6.0										
57	S13		55+56	RT.	R3-H8bh-36	36" x 30"	7.5		12.5								
57	S14		57+25	RT.	R3-H8bh-36	36" x 30"	7.5		12.5								
57	S15		56+89	LT.	M1-5-30-3	30" x 24"	5.0		11								
57	S16		57+72	RT.	D-3				10								
57	S17		58+31	LT.	R2-1-30	30" x 30"	6.25		13.5-13.5								
					R5-H2b-24												
57	S18		58+48	LT.	R2-1-30	30" x 30"	6.25		11								
57	S19		58+65	RT.	R2-1-30	30" x 30"	6.25		13.5-13.5								
					R5-H2b-24												
57	S20		59+47	RT.	R2-1-30	30" x 30"	6.25		13.5-13.5								
					R5-H2b-24												
58	S21		59+25	LT.	R3-H8bh-36	36" x 30"	7.5		12.5								
58	S22		59+38	RT.	M1-5-24-3	30" x 24"	5.0		11								
58	S23	℄ Const. S.R. 17	60+86	LT.	R3-H8bh-36	36" x 30"	7.5		12.5								
56	R1	℄ Const. S.R. 17	44+91	LT.								4	1				
56	R2		40+41	LT.								3	1				
56	R3		47+80	LT.							3			1			
56	R4		47+65	RT.	W6-3							1	1				
56	R5		49+93	LT.								1	1				
56	R6		50+05	LT.								2	1				
56	R7		46+20	RT.								1	1				
56	R8	℄ Const. S.R. 17	54+36	RT.													
SUBTOTALS							170.25	14.5	311.5	35.5	3	13	7	1	96	2.2	2
TOTALS CARRIED TO GENERAL SUMMARY							**170**	**15**	**312**	**36**	**3**	**13**	**7**	**1**	**96**	**2.2**	**2**

SIGNING SUBSUMMARY

UNI-17-3.14

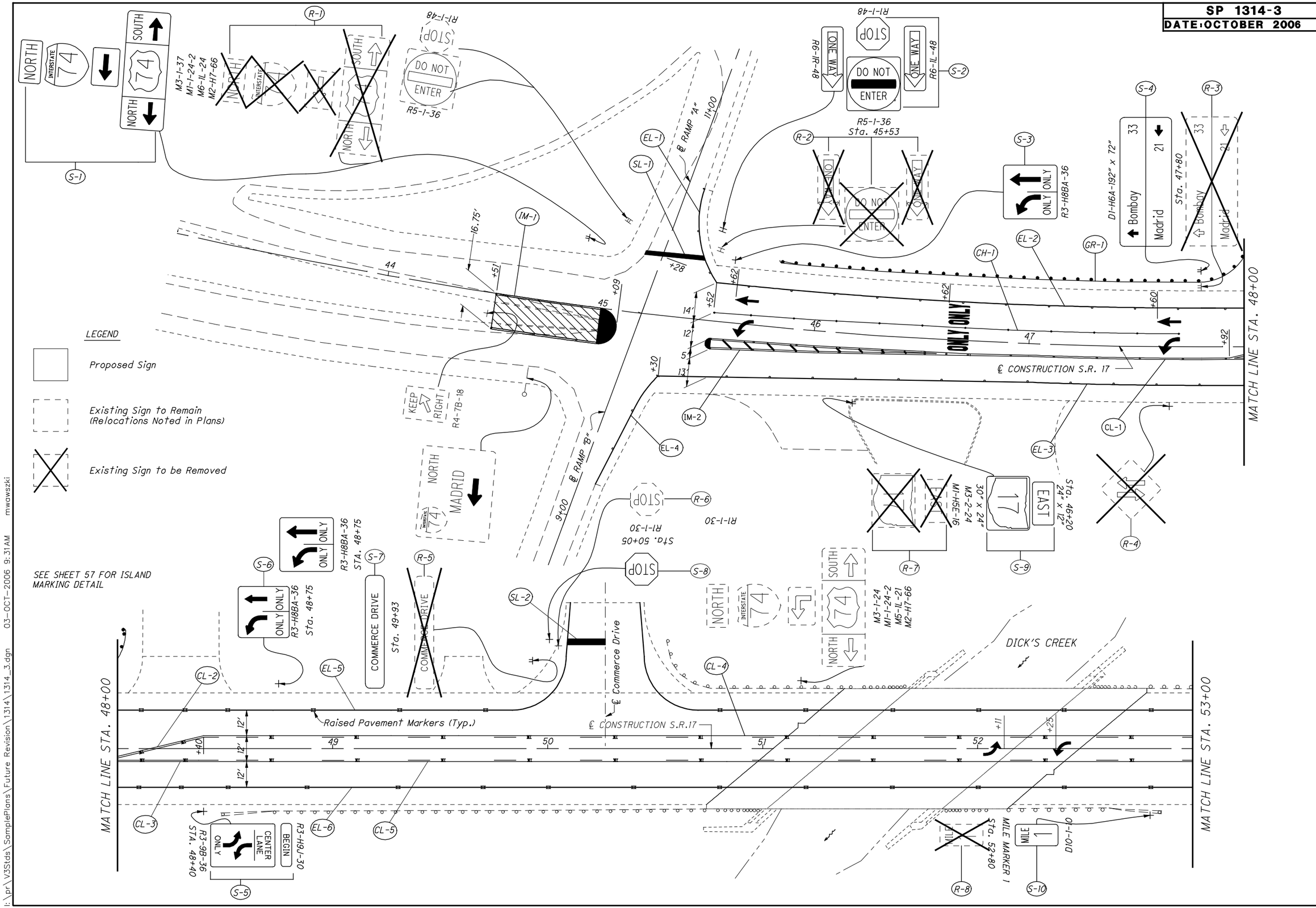

HORIZONTAL SCALE IN FEET 0 10 20 40

CALCULATED DAM
CHECKED JAG

SIGN AND PAVEMENT MARKING PLAN

UNI-17-3.14

I:\pr\V3Stds\SamplePlans\Future Revision\1314\1314_3.dgn 03-OCT-2006 9:31AM mwawszki

SP 1314-4	CALCULATED LME	CHECKED HS
DATE: OCTOBER 2006		

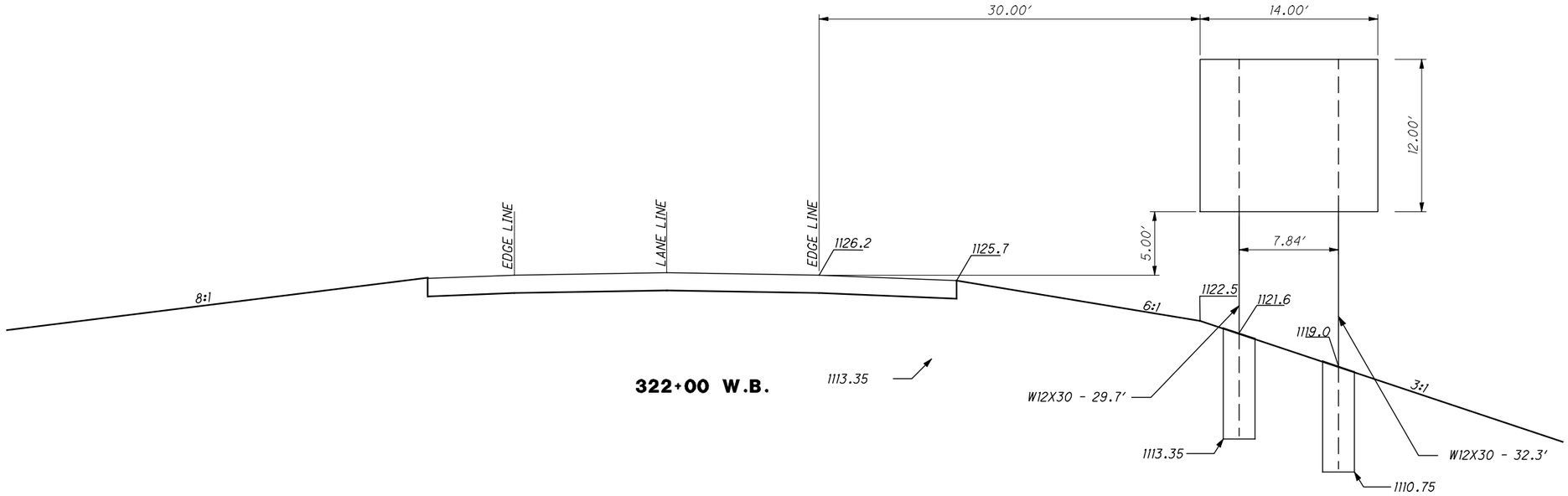

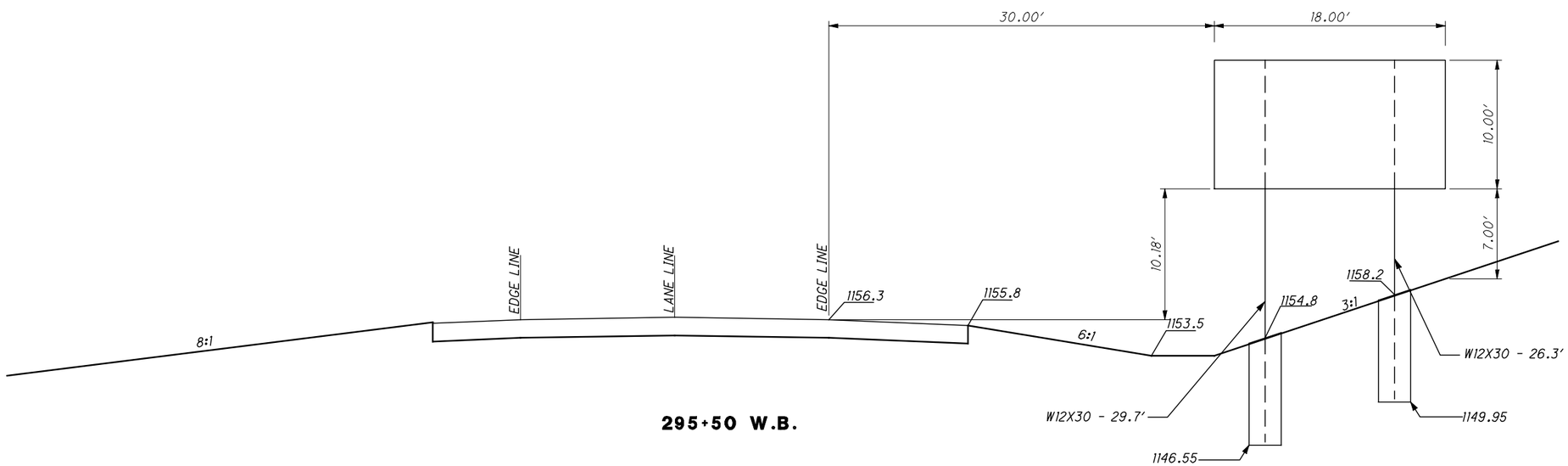

GUIDE SIGN ELEVATION DETAILS

FRA-161-23.20
LIC-161-0.00

I:\pr\V3Stds\SamplePlans\Future Revision\1314\1314_4.dgn 03-OCT-2006 9:31AM mwawszki

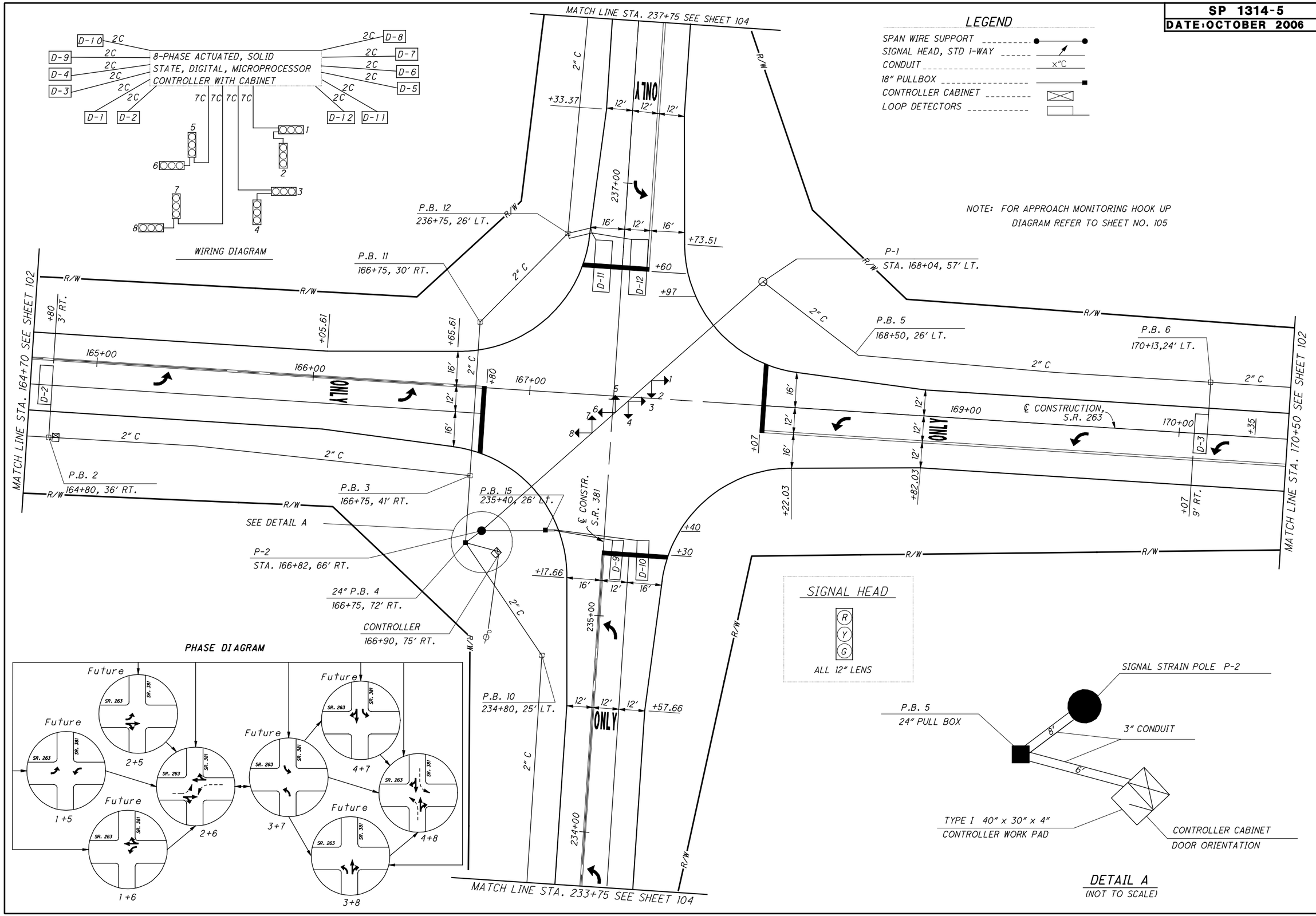

CALCULATED MJG
CHECKED DSN

TRAFFIC SIGNAL PLAN
S.R. 263

GRE-263-12.92

CALCULATED MJG
CHECKED DSN

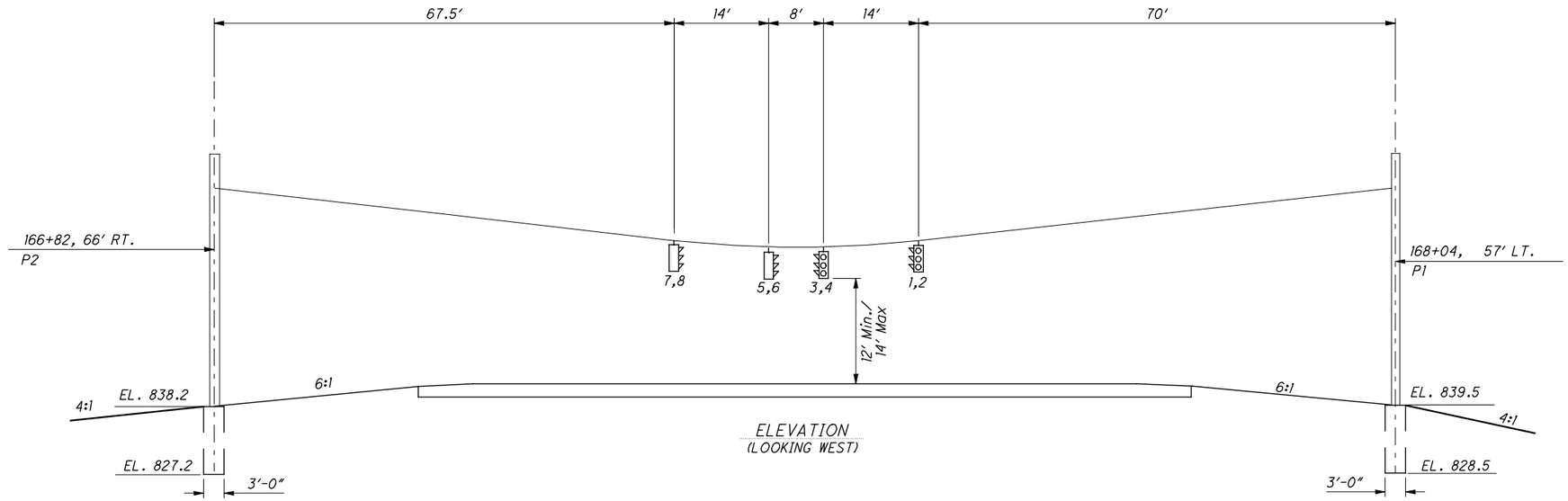

ELEVATION
(LOOKING WEST)

POLE SIZE AND FOUNDATION ELEVATION					ORIENTATION OF ACCESSORIES (Angles Measured from Index Line)				
POLE NUMBER	POLE DESIGN	POLE SIZE	ELEVATION TOP OF FOUNDATION	ELEVATION BOTTOM OF FOUNDATION	SERVICE CABLE 1-1/2"	HAND HOLE	CABLE ENTRANCE	SPAN WIRE ATTACHMENT	LUMINAIRE
P-1	10	34'	839.5	828.5	----	0	180°	180°	----
P-2	10	34'	838.2	827.2	25'	0	180°	180°	----

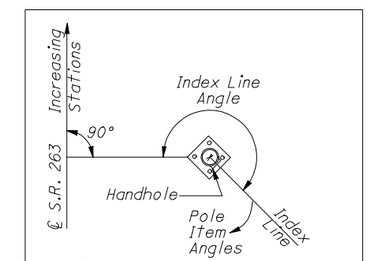

NOTES:
1. All angles measures clockwise.
2. Index line goes through the center of the handhole.

SIGNAL HEAD MOUNTING DATA			
SIGNAL	PAVEMENT ELEVATION BELOW SIGNAL	ACTUAL CLEARANCE FROM PAVE.	ELEVATION BOTTOM OF SIGNAL
1,2	842.2	16.7	858.9
3,4	841.9	16.1	857.9
5,6	841.9	16.4	858.3
7,8	841.9	17.1	858.9

SIGNAL TIMING		
PHASE	1	2
MINIMUM	15	15
MAXIMUM	25	25
EXTENSION	3	3
ADDED INITIAL	1.0	
FLASH	Y	R
RECALL	MIN	----
Y-CLEAR	4	4
ALL-RED	2	2
INTIALIZE	G	R

SIGNAL DISPLAY SEQUENCE CHART

SIGNAL HEADS	FLASH	PHASE 1 INTERVAL 1	2	3	PHASE 2 INTERVAL 4	5	6
1	Y	G	Y	R	R	R	R
2	R	R	R	R	G	Y	R
3	Y	G	Y	R	R	R	R
4	R	R	R	R	G	Y	R
5	R	R	R	R	G	Y	R
6	Y	G	Y	R	R	R	R
7	R	R	R	R	G	Y	R
8	Y	G	Y	R	R	R	R

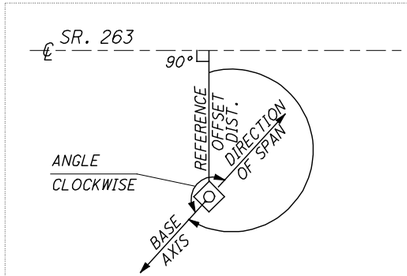

POLE ORIENTATION
FOR TABLE SEE THIS SHEET

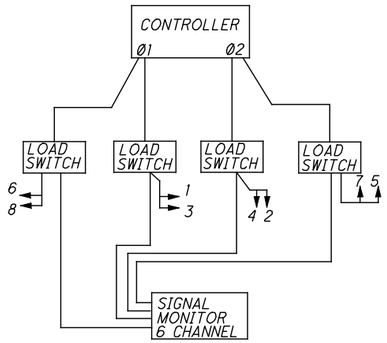

APPROACH MONITORING HOOK-UP DIAGRAM

LOOP DETECTOR CHART

LOOP	PHASE	SIZE	NO. OF TURNS	MODE	LOOP DET. UNIT	DELAY	DELAY INHIBIT PHASE
D-1	2	6 x 6	3	PULSE	1	-	-
D-2	2	6 x 18	2	PULSE	1	-	-
D-3	6	6 x 18	2	PULSE	2	-	-
D-4	6	6 x 6	3	PULSE	2	-	-
D-5	8	6 x 6	3	PULSE	3	3	8
D-6	8	6 x 18	2	PULSE	3	3	8
D-7	4	6 x 18	2	PULSE	4	3	4
D-8	4	6 x 6	3	PULSE	4	3	4
D-9	8	6 x 30	2	PRESENCE	5	3	8
D-10	8	6 x 30	2	PRESENCE	6	6	8
D-11	4	6 x 14	2	PRESENCE	7	6	4
D-12	4	6 x 14	2	PRESENCE	8	3	4

TRAFFIC SIGNAL PLAN DETAILS

GRE-263-12.92

CALCULATED
CHECKED

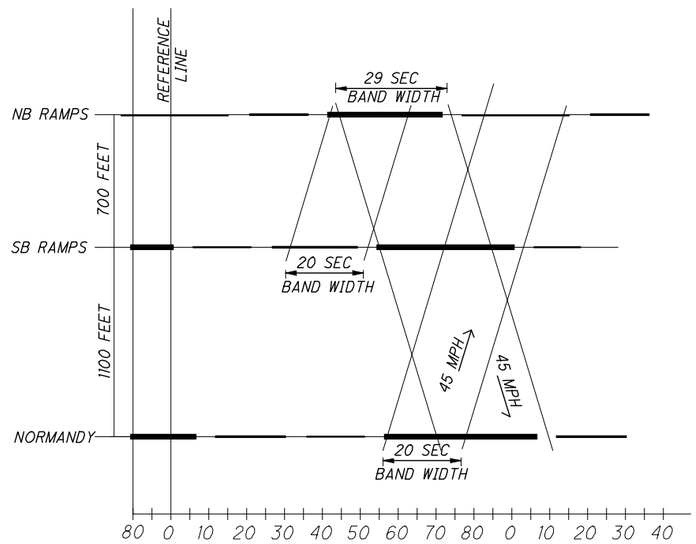

90 SECOND CYCLE LAGGING LEFT

PROTECTED ONLY LEFT TURN

MORNING & OFF PEAK

DIAL #1

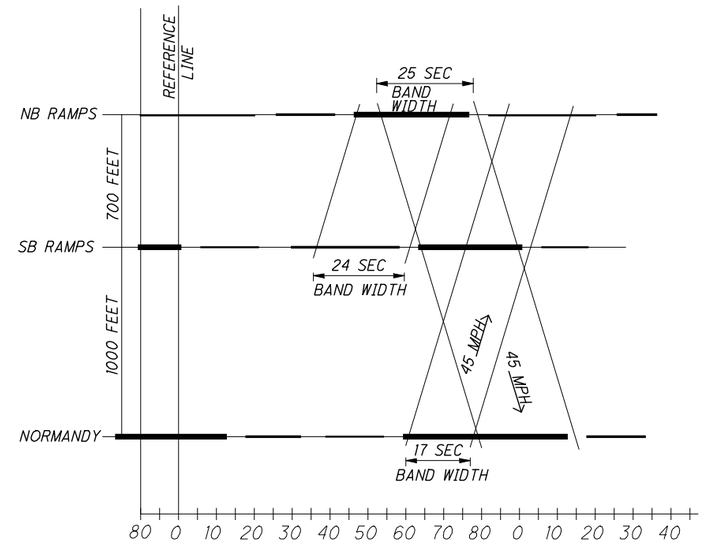

90 SECOND CYCLE LAGGING LEFT

PROTECTED ONLY LEFT TURN

EVENING PEAK

DIAL #2

SR 18 GREEN
RAMP GREEN
PROTECTED LEFT TURN

TIME-SPACE DIAGRAMS

TRAFFIC SIGNAL PLAN DETAILS

GRE-263-12.92

SP 1314-8

DATE: OCTOBER 2006

CALCULATED MJG

CHECKED DSN

SHEET NO.	LOCATION	SIDE	625 PULL BOX, 725.08, 18" EACH	625 PULL BOX, 725.08, 24" EACH	625 TRENCH FT	625 CONDUIT, 2", 725.04 FT	625 CONDUIT, 3", 725.04 FT	625 GROUND ROD EACH	625 PLASTIC CAUTION TAPE FT	632 VEHICULAR SIGNAL HEAD,3 SECTION, 12" LENS, 2-WAY EACH	632 LOOP DETECTOR UNIT, AS PER PLAN EACH	632 REMOVAL OF TRAFFIC SIGNAL INSTALLATION EACH	632 DETECTOR LOOP EACH	632 STRAIN POLE FOUNDATION EACH	632 STRAIN POLE, TYPE TC-81.10 DESIGN 10, 34' EACH	632 SIGNAL CABLE, 5 CONDUCTOR, NO. 14 AWG. FT	632 LOOP DETECTOR LEAD-IN CABLE FT	632 POWER CABLE, 2 CONDUCTOR, NO. 6 AWG. FT	632 MESSENGER WIRE, 7 STRAND, 3/8" DIA. WITH ACCESSORIES FT	633 POWER SERVICE EACH	633 CONTROLLER WORK PAD EACH	633 CONTROLLER UNIT TYPE TS2/A1 WITH CABINET, TYPE TS2 EACH	CABINET FOUNDATION EACH			
102	162+80 (D-1)	RT.	1										1				110									
102	172+07 (D-4)	LT.	1										1				110									
103	164+80	RT.	1										1				136									
103	168+04 (P-1)	RT.						1						1	1											
103	166+75	RT&LT	2	1																						
103	166+82 (P-2)	LT.						1						1	1					1						
103	166+90 (CONTROLLER)	RT.						1			4										9	1	1			
103	168+50	LT.	1																							
103	170+13 (D-3)	LT.	1										1				136									
103	236+46										2															
103	234+80	LT.	1																							
103	236+75	LT.	1																							
104	231+36 (D-5)	LT.	1										1				158									
104	233+36 (D-6)	LT.	1										1				160									
104	235+31	LT.	1								2															
104	238+54 (D-7)	LT.	1										1				136									
104	240+54 (D-8)	LT.	1										1				110									
103	PB-1 TO CONTROLLER (D-1)																									
103	PB-2 TO CONTROLLER (D-2)																									
103	PB-6 TO CONTROLLER (D-3)																									
103	PB-7 TO CONTROLLER (D-4)																									
103	PB-8 TO CONTROLLER (D-5)																									
103	PB-9 TO CONTROLLER (D-6)																									
103	PB-12 TO CONTROLLER (D-11 & D-12)																									
103	PB-13 TO CONTROLLER (D-7)																									
103	PB-14 TO CONTROLLER (D-8)																									
103	PB-15 TO CONTROLLER (D-9 & D-10)																									
103	P-1 TO P-2	RT&LT																	174							
103	P-2 TO CONTROLLER	RT																63								
103	PB-1 TO PB-3	RT			395	395			395																	
103	PB-11 TO PB-4	RT&LT			102	102			102																	
103	PB-7 TO P-1	LT			412	412			412																	
103	PB-8 TO PB-4	LT			404	404			404																	
103	PB-11 TO PB-14	LT			439	439			439																	
103	P-2 TO PB-4	RT			8		8		8																	
103	PB-4 TO CONTROLLER	RT			8		8		8																	
	167+55 (S-1)(S-2)									1																
	167+46 (S-3)(S-4)									1																
	167+39 (S-5)(S-6)									1																
	167+30 (S-7)(S-8)									1																
	167+37											1														
	S-1 → S-3 → CONTROLLER															178										
	S-2 → S-4 → CONTROLLER															178										
	S-5 → S-7 → CONTROLLER															156										
	S-6 → S-8 → CONTROLLER															156										
	TOTALS		14	1	1768	1752	16	3	1768	4	8	2	8	2	2	668	1056	63	174	1	9	1	1			
	TOTALS CARRIED TO TRAFFIC CONTROL GENERAL SUMMARY		**14**	**1**	**1768**	**1752**	**16**	**3**	**1768**	**4**	**8**	**2**	**8**	**2**	**2**	**668**	**1056**	**63**	**174**	**1**	**9**	**1**	**1**			

TRAFFIC SIGNAL SUBSUMMARY

GRE-263-12.92

SP 1314-9
DATE:OCTOBER 2006

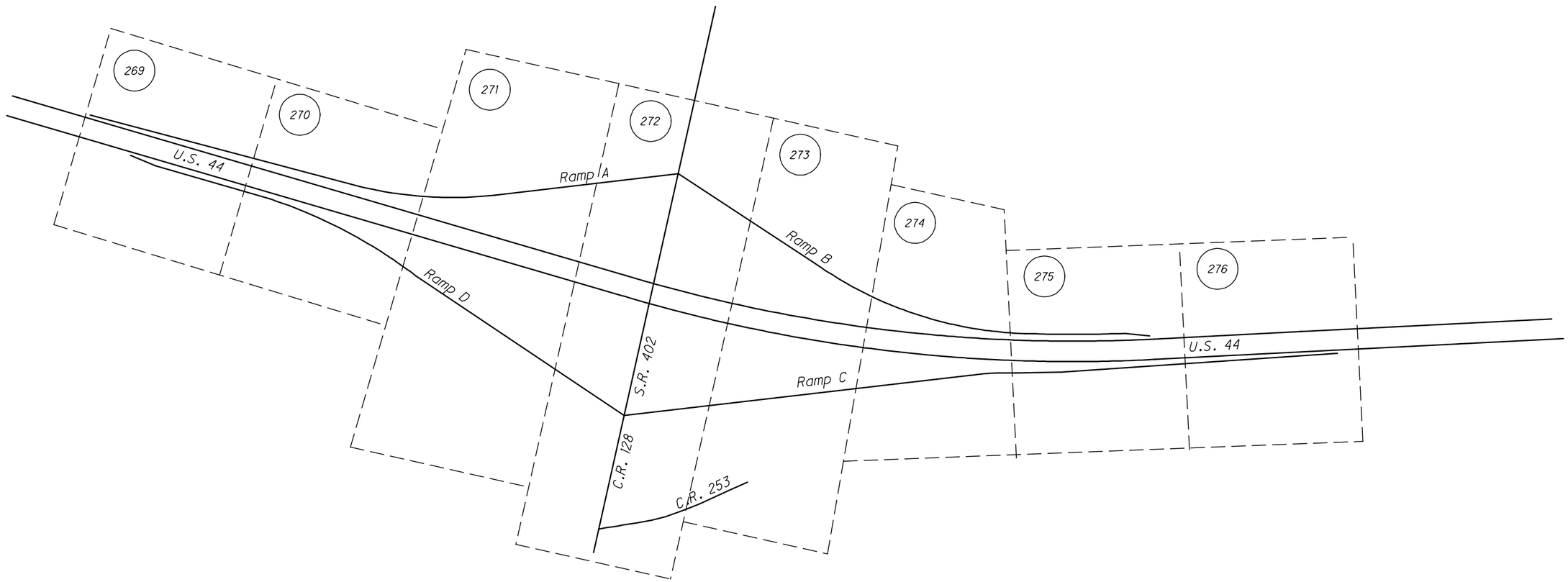

LEGEND

- PROPOSED GUARDRAIL
- SUB-SUMMARY REFERENCE NUMBER
- LIGHTING CIRCUIT CONDUIT OR DUCT CABLE (AS LABELED) WITH CONDUCTORS (AS INDICATED)
- CATCH BASIN, PIPE AND HEADWALL
- LIGHT POLE AND LUMINAIRE, INITIAL INSTALLATION
- CONTROL CENTER
- PULL BOX
- CIRCUIT STUB AND CAP

POLE LEGEND

TYPE OF LUMINAIRE	WATTAGE OF LUMINAIRE	STATION	OFFSET FROM PAVEMENT EDGE	MOUNTING HEIGHT	BRACKET ARM LENGTH	CIRCUIT NUMBER — POLE NUMBER	POLE REF NO.

N

HORIZONTAL SCALE IN FEET
0 100 200 400

LIGHTING SCHEMATIC PLAN

CHP-44-11.29

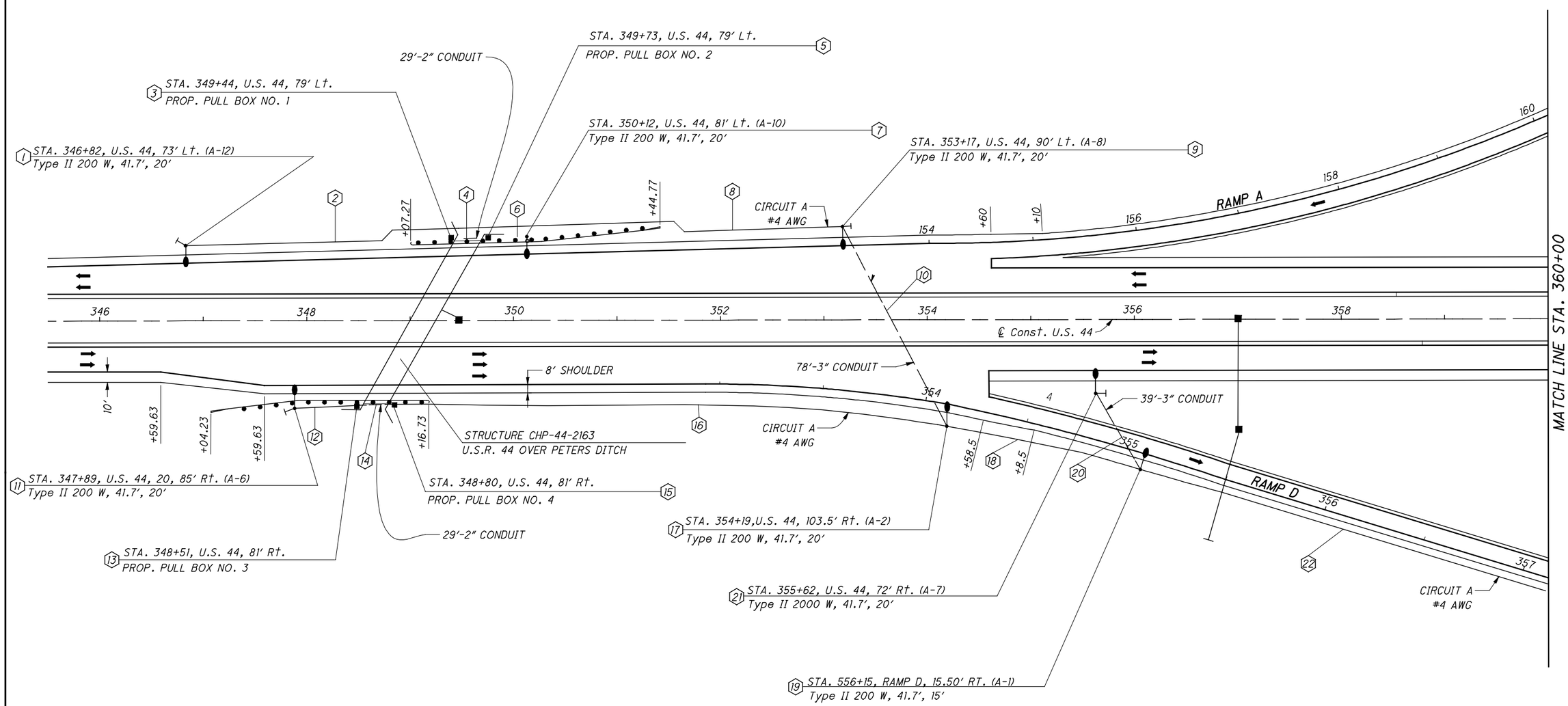

FOR LEGEND, SEE SHEET 264.

FOR QUANTITIES, SEE SHEET 267.

HORIZONTAL SCALE IN FEET
0 25 50 100

CALCULATED RNM
CHECKED CWR

LIGHTING PLAN
STA. 345+50 TO STA. 360+00

CHP-44-11.29

CALCULATED RNM
CHECKED CWR

LIGHTING PLAN SUB-SUMMARY

REFERENCE NUMBER	SHEET No.	SIDE	ROADWAY	STATION TO STATION	625 Luminaire, Style B, Type II, 200 W H.P.S., 480V	Luminaire, Style B, Type III, 200 W H.P.S., 480V	Light Pole, Design AT15B41.7	Light Pole, Design AT20B41.7	Light Pole Foundation, 24" x 8' Deep	Pull Box, 725.08, 18"	Trench	Conduit, 2", 725.04	Conduit, 3", 725.04	No. 4 AWG 5000 V Distribution Cable	No. 10 AWG Pole & Bracket Cable	1½" Duct Cable W/3 No. 4 AWG 5000 V Cables	Connector Kit, Fused Pull-Apart	Connector Kit, Unfused Pull-Apart	Connector Kit, Unfused Bolted	Unfused Permanent Connection	Power Service, As Per Plan	Ground Rod	Structure Grounding System	Plastic Caution Tape
					EACH	EACH	EACH	EACH	EACH	EACH	FOOT	FOOT	FOOT	FOOT	FOOT	FOOT	EACH	EACH	EACH	EACH	EACH	EACH	EACH	FOOT
				SHEET 269																				
1	269	Lt	US-44	346+82		1		1	1						124		2							
2	269	Lt	US-44	346+82 to 349+44							262					272						1		262
3	269	Lt	US-44	349+44						1										2				
4	269	Lt	US-44	349+44 to 349+73								29		117										
5	269	Lt	US-44	349+73						1										2				
6	269	Lt	US-44	349+73 to 350+12							39					49								39
7	269	Lt	US-44	350+12		1		1	1						124		2							
8	269	Lt	US-44	350+12 to 353+17							305					315						1		305
9	269	Lt	US-44	353+17		1		1	1						124		2							
10	269	L/R	44/D	353+17 to 554+20							212		146			222						1		212
11	269	Rt	US-44	347+89		1		1	1						124		2							
12	269	Rt	US-44	347+89 to 348+51							62					72						1		62
13	269	Rt	US-44	348+51						1										2				
14	269	Rt	US-44	348+51 to 348+80								29		117										
15	269	Rt	US-44	348+80						1										2				
16	269	Rt	44/D	348+80 to 554+20							540					550								540
17	269	Rt	RAMP D	554+20		1		1	1						124		1	1	2					
18	269	Rt	RAMP D	554+20 to 556+15							195					205						1		195
19	269	Rt	RAMP D	556+15	1		1		1						114		1	1	2					
20	269	Rt	44/D	355+62 to 556+15							85		39			95						1		85
21	269	Rt	US-44	355+62		1		1	1						124		2							
22	269	Rt	RAMP D	556+15 to 560+30							415					425						1		415
				SHEET 270																				
23	270	Rt	SR-402	54+90	1		1		1						114		2							
24	270	L/R	SR-402	53+88 to 54+90							188		97			198						1		188
25	270	Lt	SR-402	53+88	1			1	1						124		2							
																						1		
26	270	Lt	SR-402	51+32 to 53+88							256					266								256
27	270	Lt	SR-402	51+32						1										2				
28	270	Lt	SR-402	48+78 to 51+32							20	254		792									1	20
29	270	Lt	SR-402	48+78						1										2				
30	270	Lt	128/402	45+10 to 48+78							368		80			378								368
31	270	L/R	D/128	560+30 to 45+20							660					660								660
32	270	Rt	SR-402	46+22	1		1		1						114		2							
33	270	L/R	128/402	45+10 to 46+22							170		115			180						1		170
34	270	Rt	128/C	45+20 to 475+86							1030					1040								1030
35	270	Lt	CR-128	45+10	1		1		1						114		1	1	2					
																						1		
36	270	Lt	CR-128	44+10 to 45+10							100					110								100
37	270	Lt	CR-128	44+10																	1			
38	270	Lt	CR-128	44+10 to 45+20							110					110								110
39	270	L/R	CR-128	44+10 to 45+20							159		49			169								159
40	270	Lt	RAMP B	275+49	1		1		1						114		2							
																						1		
41	270	Lt	USR-44	357+98		1		1	1						124		2							
42	270	Lt	RAMP B	275+49 to 276+01							52					62						1		52
43	270	L/R	B/44	275+49 to 357+98							83		83			93								83
SUBTOTALS CARRIED TO GENERAL SUMMARY					6	7	5	8	13	6	5311	312	609	1026	1562	5471	23	3	6	12	1	13	1	5311

CHP-44-11.29

SP 1314-12
DATE: OCTOBER 2006

SUB-SUMMARY

ITEM	UNIT	DESCRIPTION	QTY.	KEY	COMMON NAME	COND.
661	Each	DECIDUOUS TREE, (1½"- 2" cal.), (ACER PLATANOSE)	26	Ap	Swedish Maple	B&B 20" min.
661	Each	DECIDUOUS TREE, (1½"- 2" cal.), (ACER REDUNDIS)	5	Ar	Secondary Maple	B&B 20" min.
661	Each	DECIDUOUS TREE, (1-1½" cal.), (CRATAEGUS ABRAHANUM)	37	Ca	Lincoln Hawthorn	B&B 16" min.
661	Each	EVERGREEN TREE, (4'-5' h.), (PINUS NUDISTFUNDIS)	208	Pn	Bare Cone Pine	B&B 14" min.
661	Each	DECIDUOUS TREE, (1½"- 2" cal.), (QUERCUS REDRUM)	28	Qr	Dead Oak	B&B 20" min.
661	Acre	PLANTING, MISC.	5.43		Wildflower Seeding and Mulching	

HORIZONTAL SCALE IN FEET
0 25 50 100

CALCULATED MTG
CHECKED CJM

LANDSCAPING PLAN

LUC-73-3.93

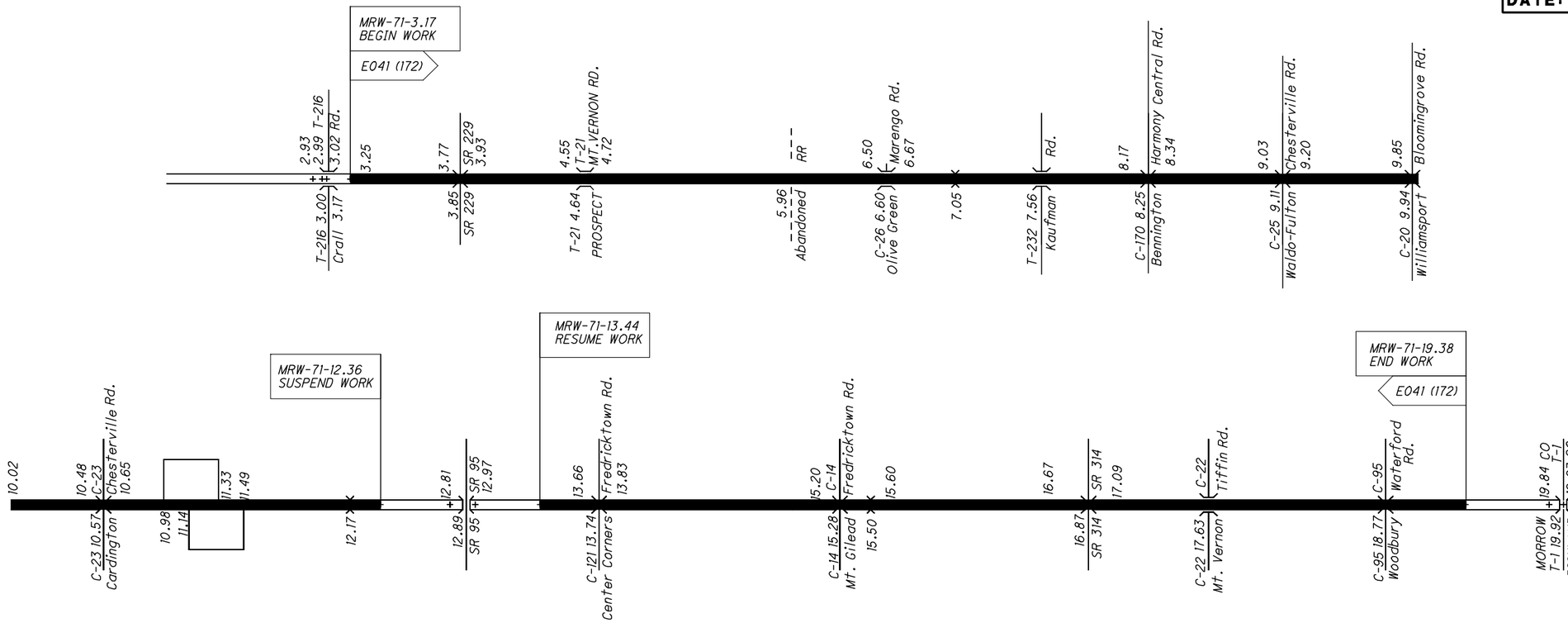

* NOTES

MAINTAIN THE EXISTING PAVEMENT CROSS SLOPE. SHOULDER WIDTH MAY VARY NEAR EXISTING RAMPS AND CROSSOVERS.

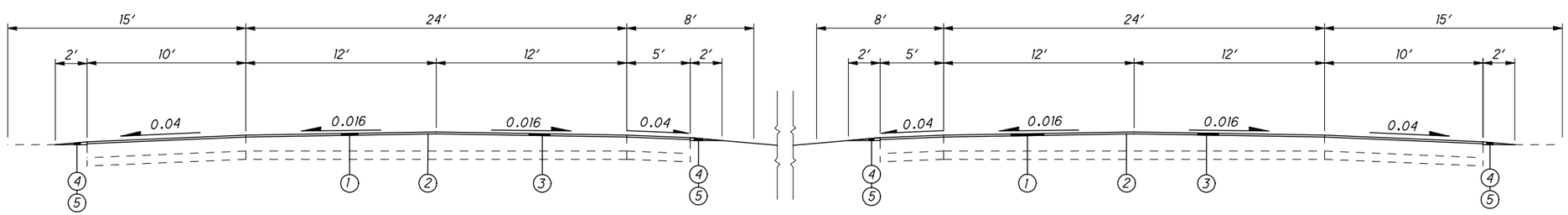

LEGEND

1. ITEM 254 - 1½″ PAVEMENT PLANING, ASPHALT CONCRETE
2. ITEM 407 - TACK COAT @ 0.075 GALLONS PER SQ. YD.
3. ITEM 446 - 1½″ ASPHALT CONCRETE SURFACE COURSE, TYPE 1, PG 64-22
4. ITEM 408 - PRIME COAT @ 0.4 GALLONS PER SQ. YD.
5. ITEM 617 - COMPACTED AGGREGATE

RESURFACING

MRW-71-3.17

I:\Pre\V3Std\SamplePlans\Future Revision\1315\1315_1.dgn 03-OCT-2006 9:32AM mwawszki

SP 1315-2
DATE: OCTOBER 2006

CALCULATED RDK
CHECKED RDK

CROSSOVER DETAIL

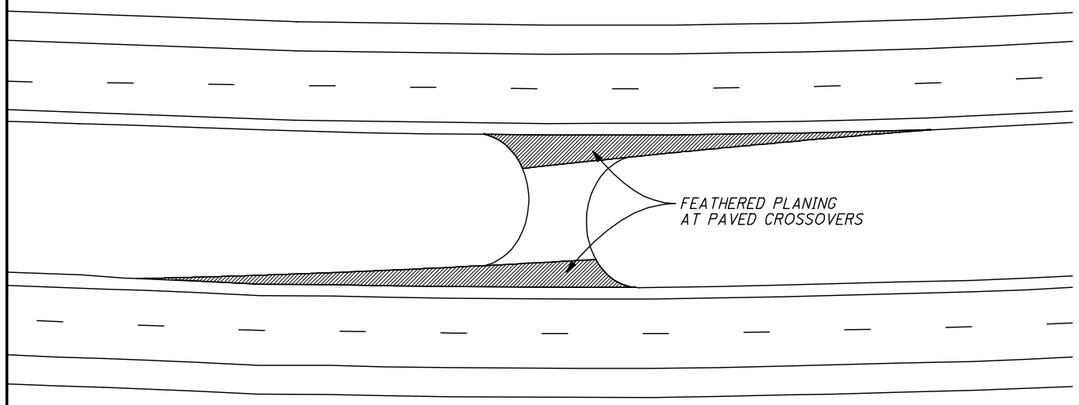

PARTIAL DEPTH PAVEMENT REPAIR AS PER PLAN

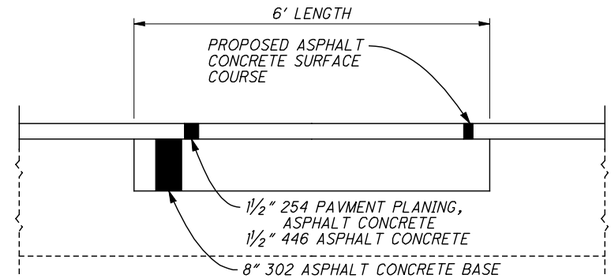

SHOULDER DETAIL

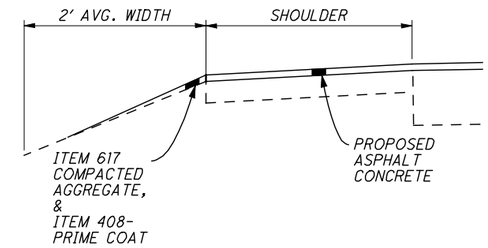

* 6' LENGTH X 12' LANE WIDTH

LOCATION					PAVEMENT WIDTH							QUANTITIES						REMARKS
						NORTHBOUND			SOUTHBOUND			254	407	408	446	617	618	
COUNTY	ROUTE	SLM	SLM	TYPICAL	LENGTH	OUTSIDE SHOULDER	PAVEMENT	MEDIAN SHOULDER	MEDIAN SHOULDER	PAVEMENT	OUTSIDE SHOULDER	PAVEMENT PLANING, ASPHALT CONCRETE	TACK COAT (0.075 GAL. PER YD²)	PRIME COAT, (0.4 GAL. PER YD²)	ASPHALT SURFACE COURSE TYPE 1 PG 64-22	COMPACT AGGREGATE	RUMBLE STRIP (ASPHALT CONCRETE)	
					FT.	FT.	FT.	FT.	FT.	FT.	FT.	1½" DEPTH YD²	GAL.	GAL.	1½" DEPTH YD³	2" DEPTH YD³	FT.	
MRW	71	3.17	12.07	1	46,992'	10'	24'	5'				203,632	15,272	8,354	8,485	1,161	93,984	MAINLINE (SOUTH OF SR-95)
MRW	71	3.17	12.36	1	48,523'				5'	24'	10'	210,267	15,770	8,626	8,761	1,198	97,046	MAINLINE (SOUTH OF SR-95)
MRW	71	13.44	19.38	1	31,363'	10'	24'	5'				135,907	10,193	5,576	5,663	775	62,726	MAINLINE (NORTH OF SR-95)
MRW	71	13.57	19.38	1	30,677'				5'	24'	10'	132,933	9,970	5,454	5,539	758	61,354	MAINLINE (NORTH OF SR-95)
MRW	71	10.99	11.14	1	792'	10'	32'*					3,696	277		154			EXTRA AREA (RAMP TAPER)
MRW	71	11.39	11.70	1	1,637'	10'	32'*					7,638	573		318			EXTRA AREA (RAMP TAPER)
MRW	71	11.33	11.48	1	792'					32'*	10'	3,696	277		154			EXTRA AREA (RAMP TAPER)
MRW	71	10.75	11.06	1	1,637'					32'*	10'	7,638	573		318			EXTRA AREA (RAMP TAPER)
																		* AVERAGE PAVEMENT WIDTH
MRW	71	4.41										340	25		14			EXTRA AREA (PAVED CROSSOVER)
MRW	71	6.67														10		GRAVEL CROSSOVER
MRW	71	7.40										340	25		14			EXTRA AREA (PAVED CROSSOVER)
MRW	71	10.37										340	25		14			EXTRA AREA (PAVED CROSSOVER)
MRW	71	11.98										340	25		14			EXTRA AREA (PAVED CROSSOVER)
MRW	71	13.63										340	25		14			EXTRA AREA (PAVED CROSSOVER)
MRW	71	14.67														10		GRAVEL CROSSOVER
MRW	71	15.06														10		GRAVEL CROSSOVER
MRW	71	15.60														10		GRAVEL CROSSOVER
MRW	71	16.75										340	25		14			EXTRA AREA (PAVED CROSSOVER)
MRW	71	17.52														10		GRAVEL CROSSOVER
MRW	71	18.03														10		GRAVEL CROSSOVER
MRW	71	5.96	6.01		255'	10'	24'	5'	5'	24'	10'	-2,210	-2	-45	-92	-6	-510	DEDUCTIONS & EXTRA AREAS
MRW	71	7.05	7.07		120'	10'	24'	5'	5'	24'	10'	-1,039	4	-21	2	-3	-240	DEDUCTIONS & EXTRA AREAS
MRW	71	7.56	7.59		145'	10'	24'	5'	5'	24'	10'	-1,254	5	-26	3	-4	-289	DEDUCTIONS & EXTRA AREAS
MRW	71	12.17	12.19		103'	10'	24'	5'	5'	24'	10'	-892	3	-18	2	-3	-206	DEDUCTIONS & EXTRA AREAS
MRW	71	15.50	15.52		80'	10'	24'	5'	5'	24'	10'	-691	3	-14	1	-2	-159	DEDUCTIONS & EXTRA AREAS
MRW	71	17.63	17.68		257'	10'	24'	5'	5'	24'	10'	-2,224	9	-46	5	-6	-513	DEDUCTIONS & EXTRA AREAS
MRW	71	18.77	18.80		155'	10'	24'	5'	5'	24'	10'	-1,341	5	-28	3	-4	-309	DEDUCTIONS & EXTRA AREAS
TOTALS CARRIED TO SUB SUMMARY												697,797	53,082	27,812	29,400	3,924	312,883	

PAVEMENT SUBSUMMARY AND DETAILS

MRW-71-3.17

03-OCT-2006 9:32AM
1315\1315_2.dgn

CALCULATED DKH
CHECKED CLH

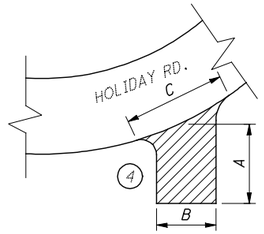

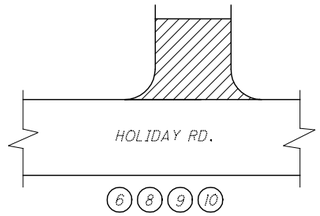

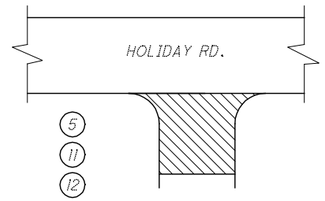

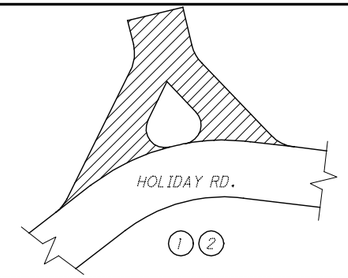

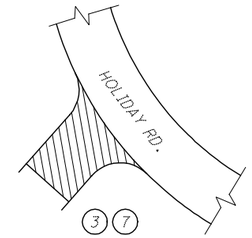

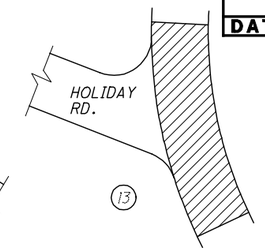

PART	ROUTE	SLM	SIDE	DESCRIPTION	INTERSECTIONS A	INTERSECTIONS B	INTERSECTIONS C	AREA	PROPOSED ITEMS 407 TACK COAT (@ 0.075 GAL/YD²)	ASPHALT CONCRETE THICKNESS	ASPHALT CONCRETE ITEM 448 TYPE 1	ASPHALT CONCRETE ITEM 448 TYPE 2	ASPHALT CONCRETE THICKNESS	EXISTING SURFACE	408 BITUMINOUS PRIME COAT (@ 0.40 GAL/YD²)
					FT	FT	FT	YD²	GAL	INCHES	YD³	YD³	INCHES		GAL
	CR-444	0.00-5.88	LT	(1) POOR RD. (T-304)	182	17	59	1,194		1.00	33	58	1.75	GRAVEL/TAR & CHIP	478
			LT	(2) POOR RD. SPUR (T-304)	43	17	43	206		1.00	6	10	1.75	GRAVEL/TAR & CHIP	82
			RT	(3) VISTA RD. (T-223)	39	20	85	369	28	1.00	10	18	1.75	ASPHALT	
			RT	(4) TURNER RD. (T-156)	35	17	65	253		1.00	7	12	1.75	GRAVEL	101
			RT	(5) BASIL RD. (T-155/CR156)	70	18	120	934	70	1.00	26	45	1.75	ASPHALT	
			LT	(6) WOODY RD. (T-155)	30	16	54	180	14	1.00	5	9	1.75	ASPHALT	
			LT	(7) McCORD RD. SPUR (T-155A)	70	12	145	1,128		1.00	31	55	1.75	GRAVEL	451
			LT	(8) BUMP RD. (T-215)	30	18	70	234	17	1.00	7	11	1.75	ASPHALT	
			LT	(9) ROUND CIRCLE	33	18	50	184	14	1.00	5	9	1.75	ASPHALT	
			LT	(10) GRAPE RD. (T-485)	30	18	95	317	24	1.00	9	15	1.75	ASPHALT	
			RT	(11) SOUTHERN DR.	24	18	40	107	8	1.00	3	5	1.75	ASPHALT	
			RT	(12) CHIP RD. (T-316)	60	18	96	640	48	1.00	18	31	1.75	ASPHALT	
			LT	(13) HOLIDAY RD./SR 32	60	26	112	747	56	1.00	21	36	1.75	ASPHALT	
	TOTALS			(CARRIED TO SHEET 10)				6,493	279		181	314			1,112

CALCULATIONS

KNO-444-0.00

I:\pr\V3Stds\SamplePlans\Future Revision\1315\1315_3.dgn 03-OCT-2006 9:32AM mwawszki

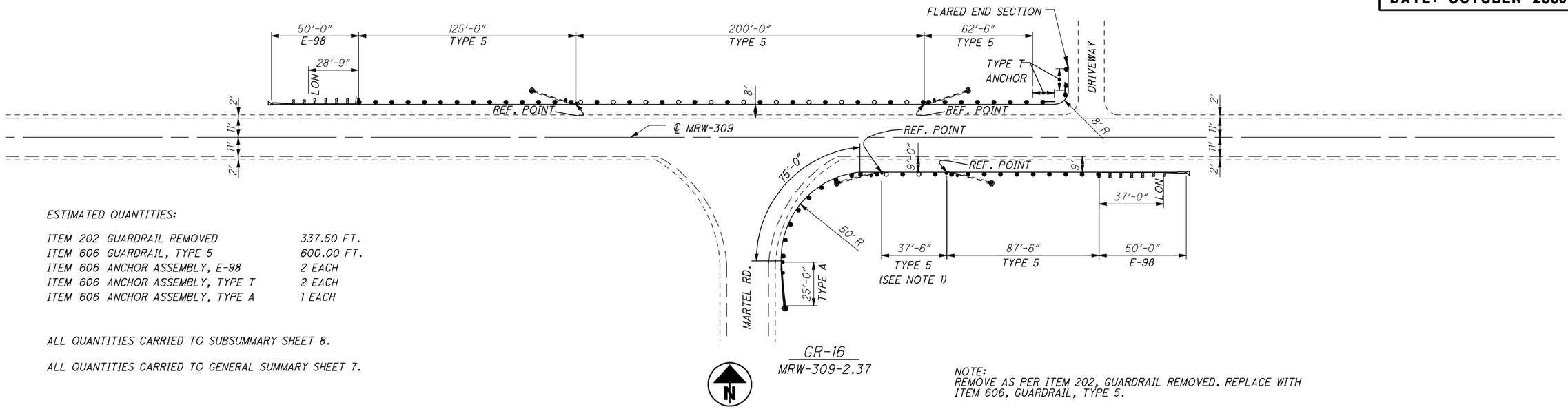

GR-16
MRW-309-2.37

ESTIMATED QUANTITIES:

ITEM 202 GUARDRAIL REMOVED	337.50 FT.
ITEM 606 GUARDRAIL, TYPE 5	600.00 FT.
ITEM 606 ANCHOR ASSEMBLY, E-98	2 EACH
ITEM 606 ANCHOR ASSEMBLY, TYPE T	2 EACH
ITEM 606 ANCHOR ASSEMBLY, TYPE A	1 EACH

ALL QUANTITIES CARRIED TO SUBSUMMARY SHEET 8.

ALL QUANTITIES CARRIED TO GENERAL SUMMARY SHEET 7.

NOTE:
REMOVE AS PER ITEM 202, GUARDRAIL REMOVED. REPLACE WITH ITEM 606, GUARDRAIL, TYPE 5.

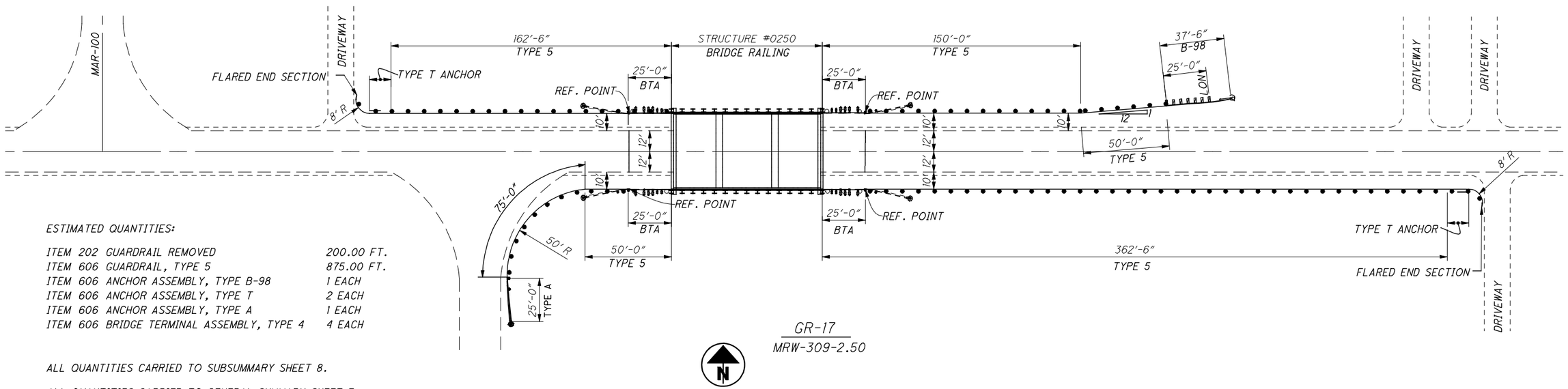

GR-17
MRW-309-2.50

ESTIMATED QUANTITIES:

ITEM 202 GUARDRAIL REMOVED	200.00 FT.
ITEM 606 GUARDRAIL, TYPE 5	875.00 FT.
ITEM 606 ANCHOR ASSEMBLY, TYPE B-98	1 EACH
ITEM 606 ANCHOR ASSEMBLY, TYPE T	2 EACH
ITEM 606 ANCHOR ASSEMBLY, TYPE A	1 EACH
ITEM 606 BRIDGE TERMINAL ASSEMBLY, TYPE 4	4 EACH

ALL QUANTITIES CARRIED TO SUBSUMMARY SHEET 8.

ALL QUANTITIES CARRIED TO GENERAL SUMMARY SHEET 7.

GUARDRAIL PLAN
MRW-309

MRW-309-7.65

I:\pr\V3Stds\SamplePlans\2006October\DGN\1315\1315_4.dgn 11-OCT-2006 12:21PM mwawszki